© – TE Connectivity. All Rights Reserved.

REVISIONS					
P	LTR	DESCRIPTION	DATE	DWN	APVD
	AA	POSOTION 1 MARKING SHOWN	14JUL2022	SCB	PS

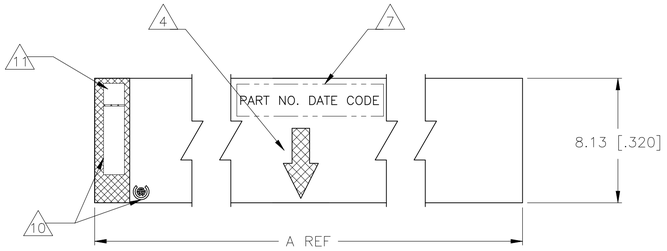

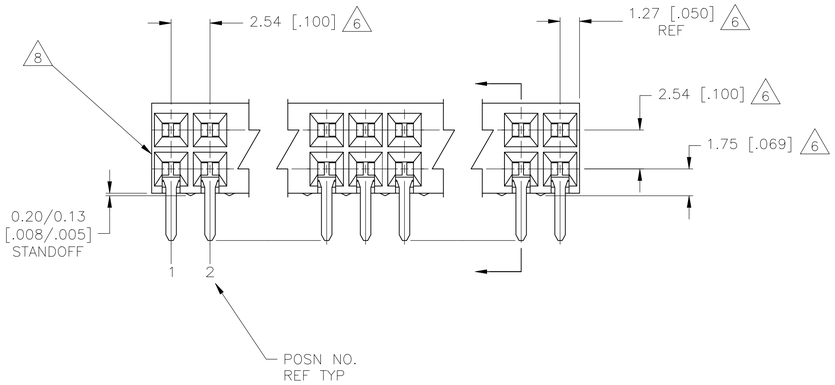

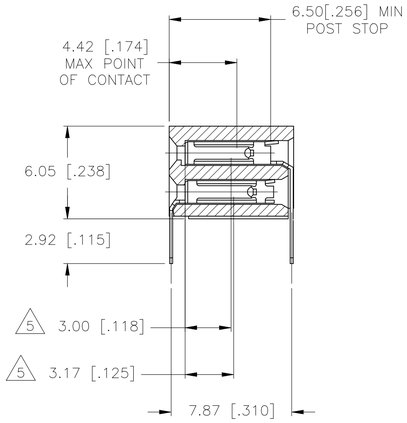

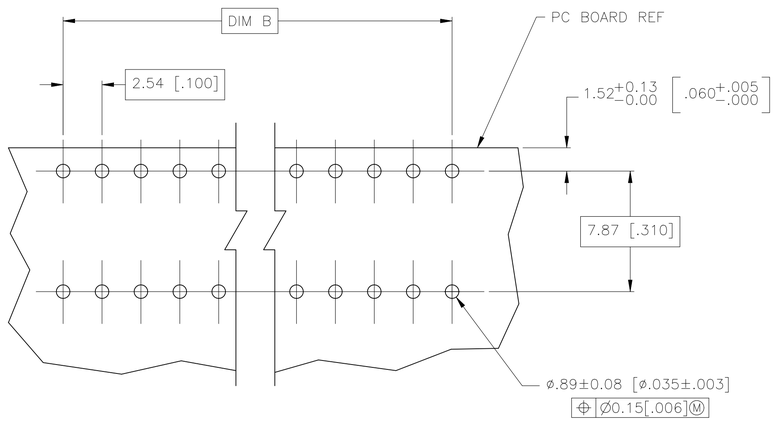

RECOMMENDED PC BOARD LAYOUT

9	2.54[.100]	5.08[.200]	4	8 6-102084-4
9	5.08[.200]	7.62[.300]	6	8 6-102084-3
9	7.62[.300]	10.16[.400]	8	6-102084-2
9	10.16[.400]	12.70[.500]	10	6-102084-1
	12.70[.500]	15.24[.600]	12	6-102084-0
SUPERSEDED BY 5-5102084-9	~~15.24[.600]~~	~~17.78[.700]~~	~~14~~	~~5-102084-9~~
	17.78[.700]	20.32[.800]	16	5-102084-8
	20.32[.800]	22.86[.900]	18	5-102084-7
	22.86[.900]	25.40[1.000]	20	5-102084-6
	25.40[1.000]	27.94[1.100]	22	5-102084-5
	27.94[1.100]	30.48[1.200]	24	5-102084-4
	30.48[1.200]	33.02[1.300]	26	5-102084-3
	33.02[1.300]	35.56[1.400]	28	5-102084-2
	35.56[1.400]	38.10[1.500]	30	5-102084-1
	38.10[1.500]	40.64[1.600]	32	5-102084-0
	40.64[1.600]	43.18[1.700]	34	4-102084-9
	43.18[1.700]	45.72[1.800]	36	4-102084-8
	45.72[1.800]	48.26[1.900]	38	4-102084-7
	48.26[1.900]	50.8[2.000]	40	4-102084-6
	50.8[2.000]	53.34[2.100]	42	4-102084-5
	53.34[2.100]	55.88[2.200]	44	4-102084-4
	55.88[2.200]	58.42[2.300]	46	4-102084-3
	58.42[2.300]	60.96[2.400]	48	4-102084-2
	60.96[2.400]	63.50[2.500]	50	4-102084-1
	63.50[2.500]	66.04[2.600]	52	4-102084-0
	66.04[2.600]	68.58[2.700]	54	3-102084-9
	68.58[2.700]	71.12[2.800]	56	3-102084-8
	71.12[2.800]	73.66[2.900]	58	3-102084-7
	73.66[2.900]	76.20[3.000]	60	3-102084-6
	76.20[3.000]	78.74[3.100]	62	3-102084-5
	78.74[3.100]	81.28[3.200]	64	3-102084-4
	81.28[3.200]	83.82[3.300]	66	3-102084-3
	83.82[3.300]	86.36[3.400]	68	3-102084-2
	86.36[3.400]	88.90[3.500]	70	3-102084-1
	88.90[3.500]	91.44[3.600]	72	3-102084-0
	91.44[3.600]	93.98[3.700]	74	2-102084-9
	93.98[3.700]	96.52[3.800]	76	2-102084-8
	96.52[3.800]	99.06[3.900]	78	2-102084-7
	99.06[3.900]	101.16[4.000]	80	2-102084-6
	101.16[4.000]	104.14[4.100]	82	2-102084-5
	104.14[4.100]	106.68[4.200]	84	2-102084-4
	106.68[4.200]	109.22[4.300]	86	2-102084-3
	109.22[4.300]	111.76[4.400]	88	2-102084-2
	111.76[4.400]	114.30[4.500]	90	2-102084-1
	114.30[4.500]	116.84[4.600]	92	2-102084-0
	116.84[4.600]	119.38[4.700]	94	1-102084-9
	119.38[4.700]	121.92[4.800]	96	1-102084-8
	121.92[4.800]	124.46[4.900]	98	1-102084-7
	124.46[4.900]	127.00[5.000]	100	1-102084-6
	127.00[5.000]	129.54[5.100]	102	1-102084-5
	129.54[5.100]	132.08[5.200]	104	1-102084-4
	132.08[5.200]	134.62[5.300]	106	1-102084-3
	134.62[5.300]	137.16[5.400]	108	1-102084-2
	137.16[5.400]	139.70[5.500]	110	1-102084-1
	139.70[5.500]	142.24[5.600]	112	1-102084-0
	142.24[5.600]	144.78[5.700]	114	102084-9
	144.78[5.700]	147.32[5.800]	116	102084-8
	147.32[5.800]	149.86[5.900]	118	102084-7
	149.86[5.900]	152.40[6.000]	120	102084-6
	152.40[6.000]	154.94[6.100]	122	102084-5
	154.94[6.100]	157.48[6.200]	124	102084-4
	157.48[6.200]	160.02[6.300]	126	102084-3
	160.02[6.300]	162.56[6.400]	128	102084-2
	162.56[6.400]	165.10[6.500]	130	102084-1
	B	A	NO. OF POSN	ASSEMBLY PART NUMBER

1. HOUSING MATERIAL: GLASS FILLED POLYESTER, COLOR– BLACK
2. CONTACT MATERIAL: PHOSPHOR BRONZE
3. CONTACT FINISH: 0.00254–0.00508[.000100–.000200] THK BRIGHT TIN–LEAD, ALL OVER 0.00127[.000050] NICKEL, ENTIRE CONTACT
4. MOLDED IN ARROW DESIGNATES THE MATING FACE OF THE CONNECTOR
5. POINT OF MEASUREMENT FOR PLATING THICKNESS OF CONTACT AREA
6. DIMENSIONS PERTAIN TO HOUSING CAVITY CENTERLINES
7. MARK PART NUMBER AND DATE CODE IN APPROXIMATE LOCATION SHOWN, EITHER END.
8. ALTERNATE LOCATION FOR DATE CODE FOR 4 AND 6 POSITION.
9. NO PART NUMBER MARKING REQUIRED FOR THIS PART.
10. TE LOGO AND CSA LOGO ARE MOLDED INTO HOUSING, THIS LOCATION.
11. POSITION #1 MARKING ON THIS LOCATION FOR ALL PART NUMBERS EXCEPT 6–102084–4

THIS DRAWING IS A CONTROLLED DOCUMENT.

DIMENSIONS: mm

TOLERANCES UNLESS OTHERWISE SPECIFIED:
0 PLC ± –
1 PLC ± –
2 PLC ± –
3 PLC ± 0.13[.005]
4 PLC ± –
ANGLES ± –

MATERIAL 1 2
FINISH 3

DWN	R BROWN	03JUN02
CHK	J OLSON	03JUN02
APVD	J OLSON	03JUN02
PRODUCT SPEC	—	
APPLICATION SPEC	—	
WEIGHT	—	

TE Connectivity

NAME: AMPMODU MOD II RECEPTACLE ASSEMBLY, HORIZONTAL, .100 CL, 2 ROW, CLOSED–ENTRY, SHORT POINT OF CONTACT, END–TO–END STACKABLE

SIZE	CAGE CODE	DRAWING NO	RESTRICTED TO
A1	00779	C-102084	—

CUSTOMER DRAWING | SCALE 5:1 | SHEET 1 OF 1 | REV AA

4805 (1/15)