1mm Pitch Double Rows Low Profile Wire-to-Board Connectors

DF20 Series

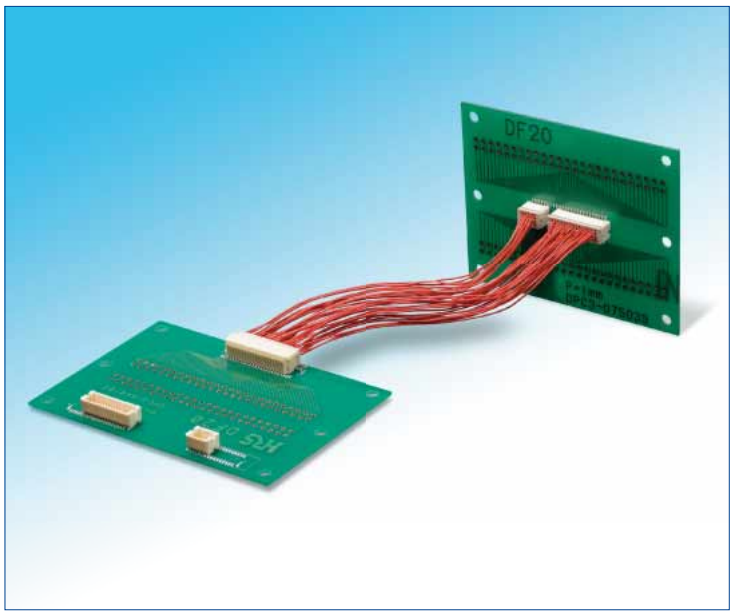

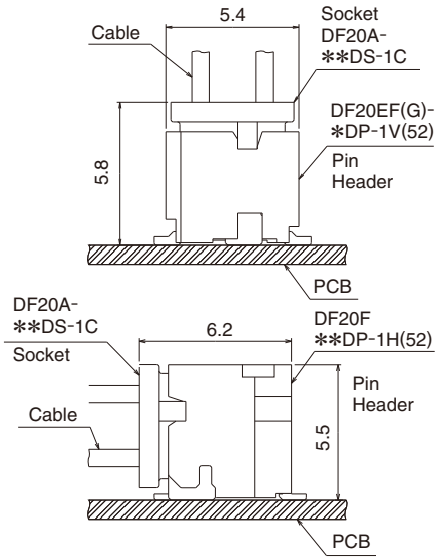

■Features

1. Contact Pitch

1mm contact pitch allows reliable solder and cable termination.

2. Reliable electrical connection wipe

Effective electrical connection is assured with a 1mm wipe of mating contacts.

3. Narrower external width and length

Redesigned metal fittings decreased the overall length of the board- mount receptacle and permit end-to-end mounting of several connectors.

4. Automatic equipment board placement

Straight type pin headers are supplied with a 5.4mm × 4.6mm flat platform to allow vacuum pick-up and placement on the board.

5. Product variations

(1) Available with 10, 20, 30, 40, and 50 contacts.
(2) Pin headers are available in two types : with or without board positioning bosses.
(3) Depending on specific application pin headers can be ordered in straight or right angle types.

Narrower external width and length

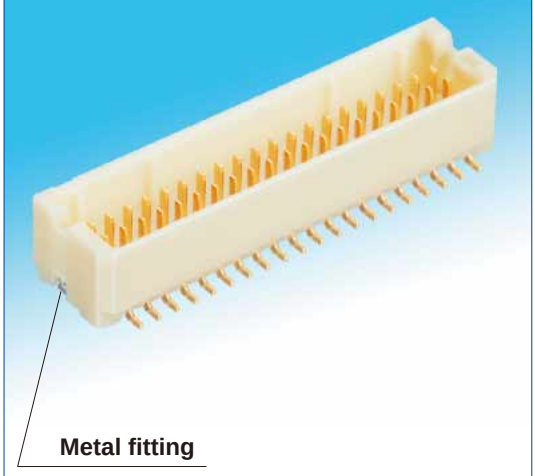

■Applications

Notebook PC, small office automation equipment, small consumer devices, portable devices.
Any application requiring low profile reliable board-to-cable connection with a 28 AWG, 30 AWG, 32 AWG conductors.

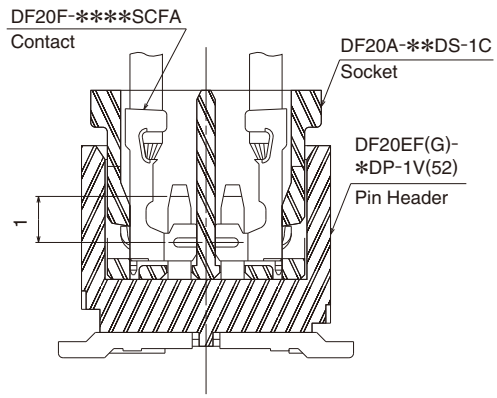

1mm Pitch, Double Rows

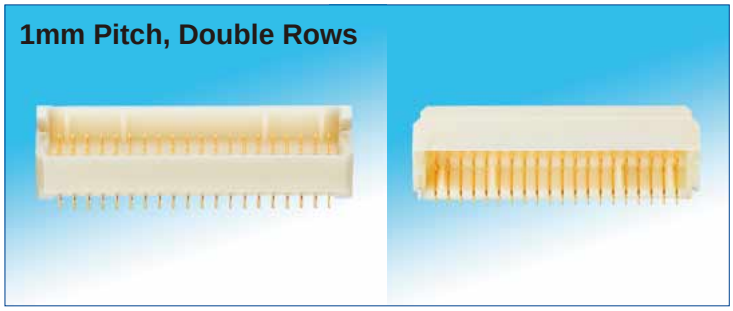

Dec.1.2021 Copyright 2021 HIROSE ELECTRIC CO., LTD. All Rights Reserved.

Dec.1.2021 Copyright 2021 HIROSE ELECTRIC CO., LTD. All Rights Reserved.

■Product Specifications

Rating	Rated current	28 AWG : 1A/pin 30 AWG : 0.9A/pin 32 AWG : 0.7A/pin	Operating temperature range	-35°C to +85°C (Note 1)	Storage temperature range	-10°C to +60°C
	Rated voltage	100V AC/DC	Operating humidity range	40% to 80% (Note 2)	Storage humidity range	40% to 70%

Item	Specifications	Conditions
1. Insulation resistance	500MΩ min.	Measured at 100V DC
2. Withstanding voltage	No flashover or insulation breakdown	Conduction of 300V AC applied for 1 minute
3. Contact resistance	30MΩ max.	Measure at 1mA.
4. Vibration	No electrical discontinuity of 1μs min.	Frequency of 10 to 55 Hz, single amplitude of 0.75mm, in 3 directions for 10 cycles
5. Humidity	Contact resistance of 30mΩ max., insulation resistance of 100MΩ min.	Temperature of 40±2℃, humidity of 90% to 95%, left standing for 96 hours
6. Temperature cycle	Contact resistance of 30mΩ max, insulation resistance of 500MΩ min.	(-55℃ : 30min / 5℃ to 35℃ : 2 to 3min / 85℃ : 30min / 5℃ to 35℃ : 2 to 3min) for 5 cycles
7. Mechanical operation	Contact resistance of 30mΩ max.	50 cycles
8. Resistance to Soldering heat	No deformation of the insulator parts that will affect performance	Reflow : At the recommended temperature profile, manual solder : Soldering iron temperature of 300℃ for 3 seconds

Note1 : Includes temperature rise caused by current flow.
Note2 : No condensing.
Note3 : Information contained in this catalog represents general requirements for this Series. Contact us for the drawings and specifications for a specific part number shown.

■Materials / Finish

Item	Part	Material	Finish	Remarks	RoHS2
Socket	Insulator	Polyamide	Color : Beige	UL94V-0	YES
Crimping contact	Contact	Phosphor bronze	Gold plating	———	
Pin header	Insulator	Polyamide	Color : Beige	UL94V-0	
	Contact	Phosphor bronze	Gold plating	———	
	Metal Fitting	Brass	Tin Plating	———	

■Product Number Structure

Refer to the chart below when determining the product specifications from the product number.
Please select from the product numbers listed in this catalog when placing orders.

●Pin header

DF20 # - ＊ DP - 1 V
❶ ❷ ❸ ❹ ❺ ❻

❶Series name	: DF20, DF20E	❹Connector type	DP : Double-row pin header
❷Boss Type	F : Without boss G : With boss	❺Contact pitch	: 1mm
❸Number of contacts	: 10, 20, 30, 40, 50	❻Type of housing, header	V : Straight SMT header H : Right angle SMT header

●Crimping contact

DF20 F - 2830 SCF A - (＊＊)
❶ ❷ ❸ ❹

❶Applicable wire size	2830 : 28 to 30 AWG 3032 : 30 to 32 AWG	❸Plating type	A : Gold plating
❷Contact & packaging type	SCF : Socket contact reel	❹Packaging Specifications	04 : 1 reel = 10,000 pieces 44 : 1 reel = 20,000 pieces

●Crimp socket

DF20 A - ＊ DS - 1 C
❶ ❷ ❸ ❹ ❺

❶Series name	: DF20A	❹Contact pitch	: 1mm
❷Number of contacts	: 10, 20, 30, 40, 50	❺Type of housing, header	C : Crimp housing
❸Connector type	DS : Double-row socket		

■Double Row Socket

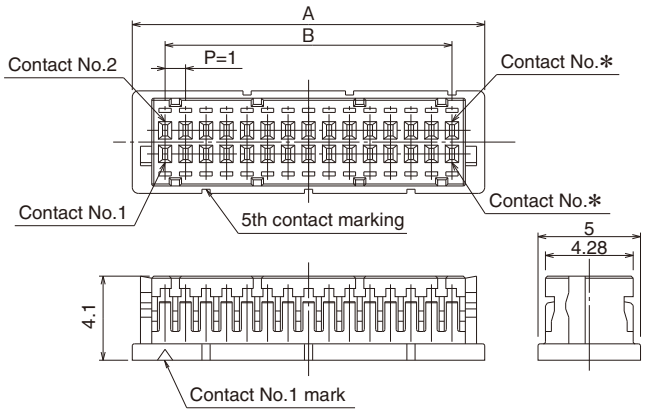

Unit : mm

Part No.	HRS No.	No. of Contacts	A	B
DF20A-10DS-1C	686-0020-3	10	7.2	4.0
DF20A-20DS-1C	686-0021-6	20	12.2	9.0
DF20A-30DS-1C	686-0022-9	30	17.2	14.0
DF20A-40DS-1C	686-0023-1	40	22.2	19.0
DF20A-50DS-1C	686-0024-4	50	27.2	24.0

【Specifications number】-*, (**)
Blank : Bag packaging (100 pcs / pack)

Note : Sales quantities are by the package unit (containing 100 pieces). Please order by package unit.

■Crimp Contacts

Part No.	HRS No.	Finish	Applicable Wire (Tin plated annealing copper wire) (Note 1)				
			UL Style	AWG	Wire Construction	Sectional Area	Jacket Diameter (Note 2)
DF20F-2830SCFA(**)	686-0042-6 **	Gold plated	1571 (Thin type)	28 AWG 30 AWG	7cores/0.127mm 7cores/0.1mm	0.089mm² 0.055mm²	0.54~0.6mm (0.58mm) 0.54~0.6mm (0.56mm)
DF20F-3032SCFA(**)	686-0043-9 **	Gold plated	1571 (Thin type)	30 AWG 32 AWG	7cores/0.1mm 7cores/0.08mm	0.055mm² 0.035mm²	0.54~0.6mm 0.54~0.6mm

【Specifications number】(**)
(04) : 10,000 pieces/reel
(44) : 20,000 pieces/reel

Note 1 : Please consult with our Hirose sales representative when using wires other than these applicable wire.
Note 2 : The wire of jacket diameter in parenthis is only suitable when crimping with hand tool.

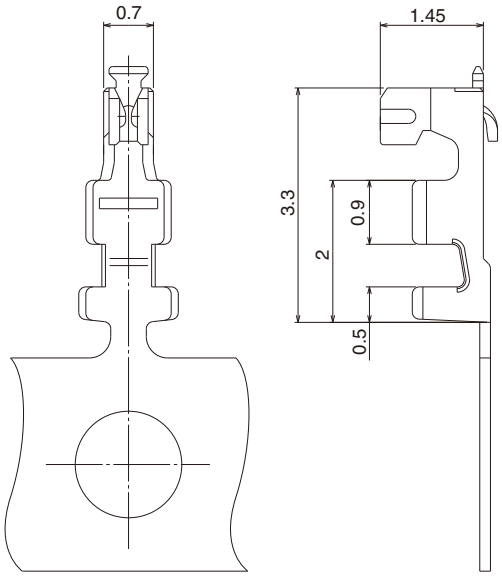

●Applicable Crimping Tool

Type	Part No.	HRS No.	Applicable contact
Applicator	AP105-DF20-2830S	901-4572-6	DF20F-2830SCFA(04), DF20F-2830SCFA(44) DF20F-3032SCFA(04), DF20F-3032SCFA(44)
Manual Crimping Tool	HT302/DF20B-2830S	902-4540-6	DF20F-2830SCFA(04), DF20F-2830SCFA(44)
Press	CM-105C	901-0001-0	———

Note 1 : Hirose Electric will not be responsible for any problems caused by use of tools other than specified.
Note 2 : Please conduct crimping work according to the "Crimp Quality Standard (ETAD-H0929-00)" and "Crimp condition table".

Dec.1.2021 Copyright 2021 HIROSE ELECTRIC CO., LTD. All Rights Reserved.

■Double Row Straight Pin header

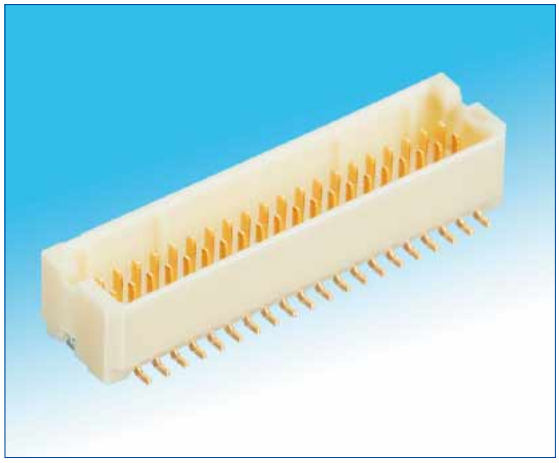

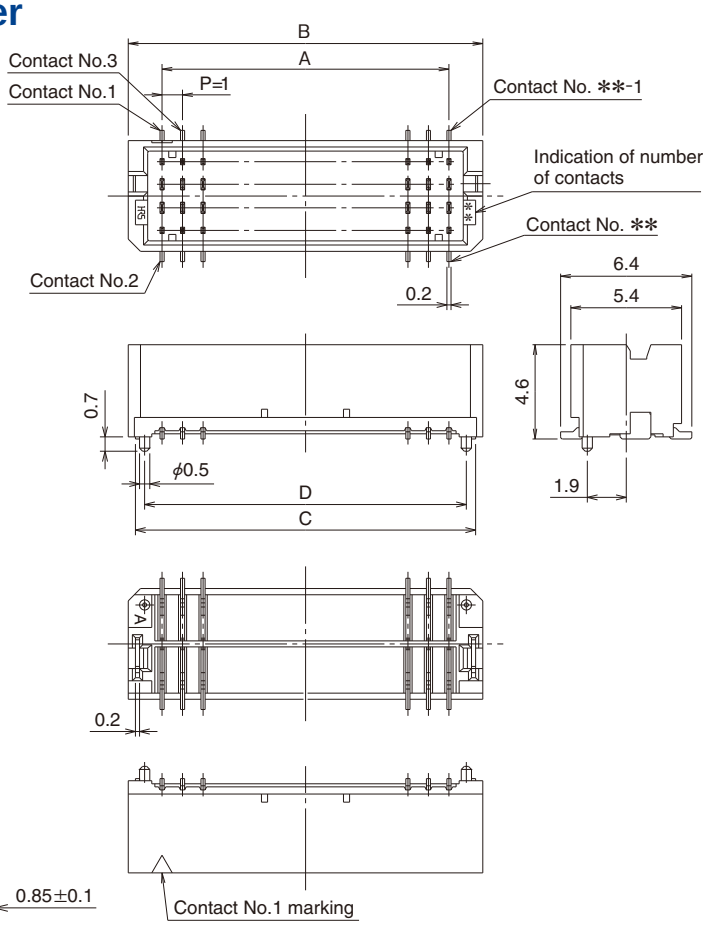

◆PCB Footprints

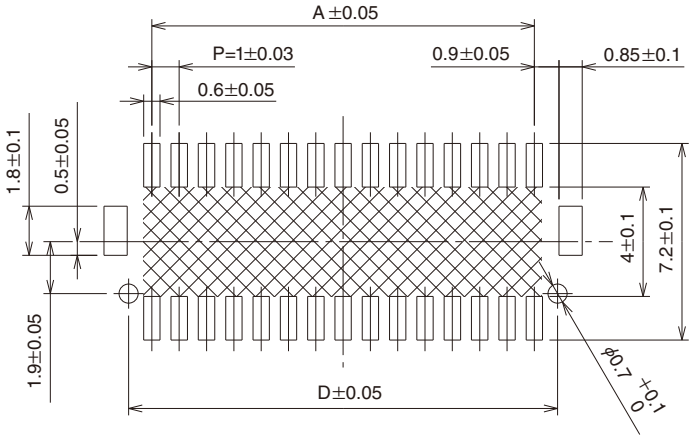

Note 1 : Shaded area must be free of any electrically conductive traces to avoid contact with soldered pin header terminations.
Note 2 : Required only for pin headers supplied with the positioning boss.

Unit : mm

Part No.	HRS No.	No. of contacts	A	B	C	D	Remarks
DF20EF-10DP-1V(52)	686-0055-0 52	10	4.0	7.3	6.6	—	Without boss
DF20EF-20DP-1V(52)	686-0056-0 52	20	9.0	12.3	11.6	—	
DF20EF-30DP-1V(52)	686-0057-0 52	30	14.0	17.3	16.6	—	
DF20EF-40DP-1V(52)	686-0058-0 52	40	19.0	22.3	21.6	—	
DF20EF-50DP-1V(52)	686-0053-0 52	50	24.0	27.3	26.6	—	
DF20EG-10DP-1V(52)	686-0059-0 52	10	4.0	7.3	6.6	5.7	With boss
DF20EG-20DP-1V(52)	686-0060-0 52	20	9.0	12.3	11.6	10.7	
DF20EG-30DP-1V(52)	686-0061-0 52	30	14.0	17.3	16.6	15.7	
DF20EG-40DP-1V(52)	686-0062-0 52	40	19.0	22.3	21.6	20.7	
DF20EG-50DP-1V(52)	686-0054-0 52	50	24.0	27.3	26.6	25.7	

Note 1 : Order embossed tape packaging items by the reel. (1 reel contains 1,000 pieces)
Note 2 : Vacuum pick-up cap are included with embossed tape packaged connectors.

【Specifications number】-∗, (∗∗)
(52) : Gold plating,
embossed tape packaging

Dec.1.2021 Copyright 2021 HIROSE ELECTRIC CO., LTD. All Rights Reserved.

■Double Row Right angle Pin header

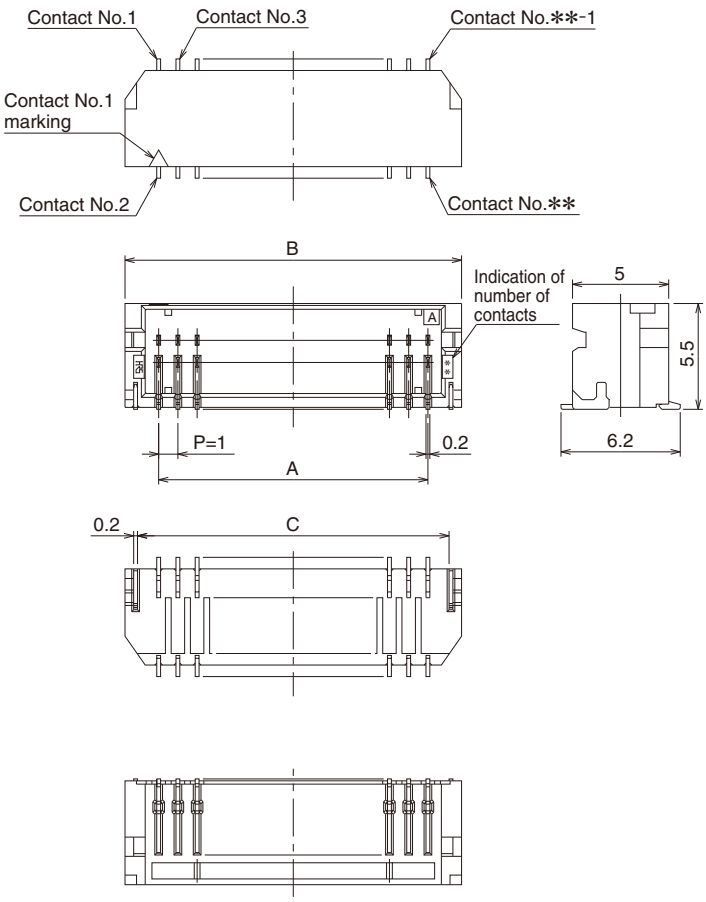

◆PCB Footprints

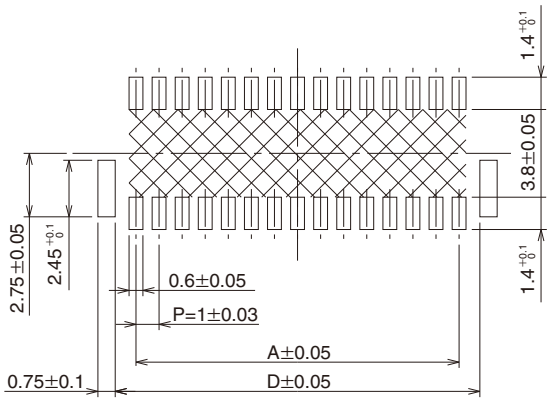

Note : Shaded area must be free of any electrically conductive traces to avoid contact with soldered pin header terminations.

Unit : mm

Part No.	HRS No.	No. of contacts	A	B	C	D	Remarks
DF20F-10DP-1H (52)	686-0027-2 52	10	4.0	7.5	6.2	5.8	Without boss
DF20F-20DP-1H (52)	686-0028-5 52	20	9.0	12.5	11.2	10.8	
DF20F-30DP-1H (52)	686-0029-8 52	30	14.0	17.5	16.2	15.8	
DF20F-40DP-1H (52)	686-0030-7 52	40	19.0	22.5	21.2	20.8	

Note : Order embossed tape packaging items by the reel. (1 reel contains 1,000 pieces)

【Specifications number】-*, (**)
(52) : Gold plating,
embossed tape packaging

Dec.1.2021 Copyright 2021 HIROSE ELECTRIC CO., LTD. All Rights Reserved.

◆Embossed Carrier Tape Dimensions

●Straight pin header

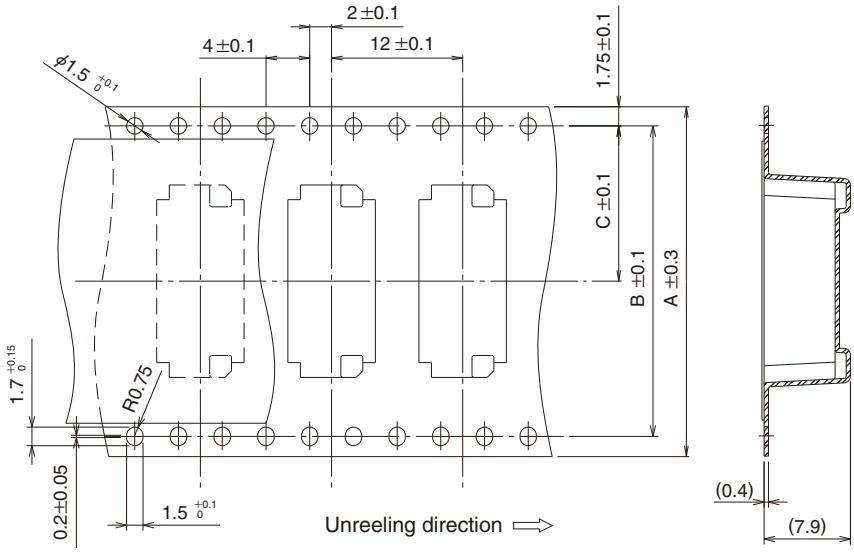

●Right angle pin header

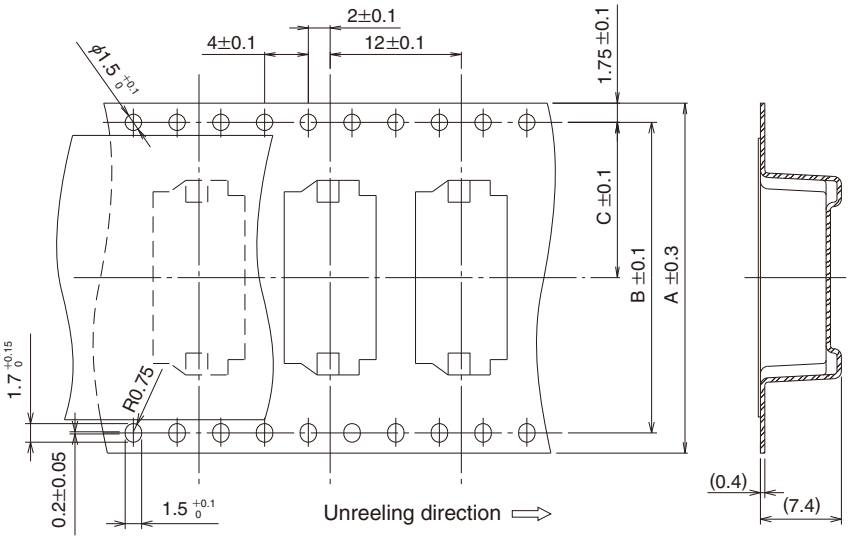

●Reel dimensions

Part No.	No. of Contacts	A	B	C	D
DF20EF(G)-10DP-1V(52)	10	16	——	7.5	16.4
DF20EF(G)-20DP-1V(52)	20	24	——	11.5	24.4
DF20EF(G)-30DP-1V(52)	30	32	28.4	14.2	32.4
DF20EF(G)-40DP-1V(52)	40	44	40.4	20.2	44.4
DF20EF(G)-50DP-1V(52)	50	44	40.4	20.2	44.4
DF20F-10DP-1H(52)	10	16	——	7.5	16.4
DF20F-20DP-1H(52)	20	24	——	11.5	24.4
DF20F-30DP-1H(52)	30	32	28.4	14.2	32.4
DF20F-40DP-1H(52)	40	44	40.4	20.2	44.4

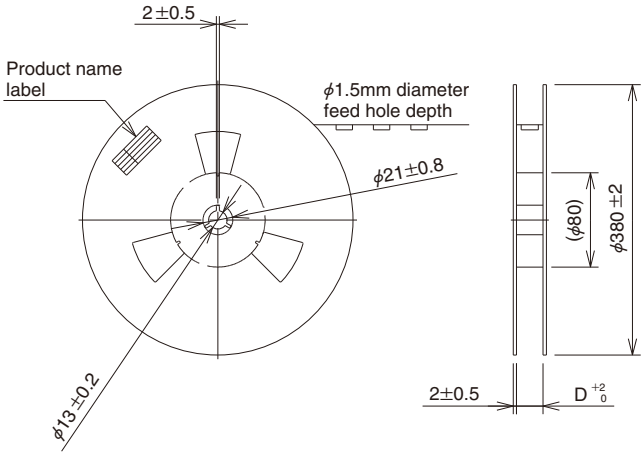

Dec.1.2021 Copyright 2021 HIROSE ELECTRIC CO., LTD. All Rights Reserved.

◆Crimping Precautions

■Items required prior to start crimping

The work-related documents shown below are required before starting the harness connections.
(The ● mark shows the document required.)
When the documents shown below are not available, ask our sales personnel to provide them.

Document Title	Description	Automatic Crimping Machine	Hand Crimping Tool	Remarks
(1) Main unit of crimping machine instruction manual	Explanation of main press machine unit	●	–	When purchasing main press machine unit, it is bundled.
(2) Operating Instructions for Hand Tool	Crimp operation	●	–	When purchasing Applicator, it is bundled.
(3) Applicator Spare Parts Identification	Explanation for Applicator installation	●	–	
(4) Crimp Conditions	Standard values of : Crimp height ; Tensile strength	●	–	
(5) Crimp Quality Standards	Various standards for crimping conditions	●	–	
(6) Operating Instructions for Hand Tool	Inspection items of : Crimp height ; Crimp operation Tensile strength	–	●	When purchasing Hand Tool, it is bundled.
(7) Cable Assembly Procedure	Cable Assembly Procedure	●	●	Ask our sales personal to provide them.

■Tools

When crimping work is applied to our contacts, the tool designated by Hirose should be used.
Crimping work by using tools other than as designated must not be done because it may result in contact failure, disconnection of cable, etc.
∗The operating instructions manual is available for the crimping machine and the applicator.
Be sure to carefully read the operating instructions manual befor implementing the work.

■Applicable electric wires

Check that the electric wire to be used is in the range of application.
If you intend to use an electric wire other than the recommended one, ask our sales personnel.

[Precautions]

- Electric wires that are applicable for crimping connectors shall, principally, be the tin-plated stranded soft-copper wire.
- Crimping of electric wires wherein single wires, polyester yarns, etc., exist and crimping of tin-coated wires should be avoided.
- Avoid crimping two electric wires together.
- The setting values of crimp height (Note 1) may vary between tin-plated and gold-plated terminals even if the same electric wires are used.
- The setting values of crimp height (Note 1) may vary depending on the difference in the core wire configuration even if the computed cross-sectional area is the same.

Note 1 : The crimp height is an important item that determines crimping quality. We execute crimping tests for each electric wire to ensure the optimal value for the crimp height with high precision, thereby ensuring optimal setup values.

Dec.1.2021 Copyright 2021 HIROSE ELECTRIC CO., LTD. All Rights Reserved.

◆Handling Points

1. Recommended Soldering Temperature Profile for IR Reflow.	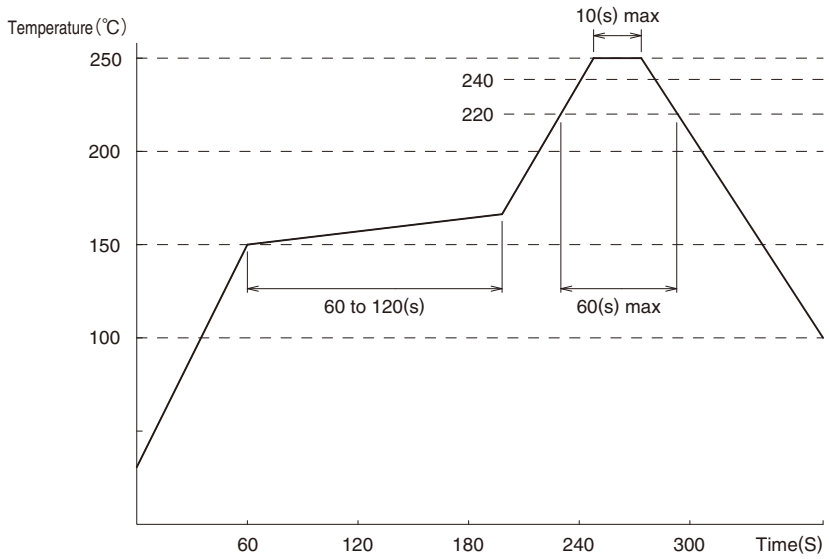 Note 1 : Up to 2 cycles of reflow soldering are possible under the same conditions, provided that there is a return to normal temperature between the first and second cycle. Note 2 : The temperature indicates the board surface temperature at the points of contacts with the connector terminals.
2. Recommended Manual Soldering Conditions	Soldering temperature : 290°C ±10°C, Soldering time : within 3 sec.
3. Recommended Solder Screen Thickness	0.15mm
4. Board Warping	Maximum of 0.03mm at the connector center section, with both ends of the connector as reference points.
5. Cleaning Conditions	Refer to "Wire-to-Board Connector Use Handbook"
6. Wiring Termination Conditions	Refer to "Wire-to-Board Connector Use Handbook" Crimp contacts should be handled with care as not to cause any deformation or damage affecting the performance or termination.
7. Mating / un-mating precautions	Excessive twisting and pulling on wires during mating/un-mating should be avoided as it may cause damage to connectors.
8. Precautions	Please refer to the following documents. ■ Crimp Quality Standard (ETAD-H0929-00) ■ Cable Assembly Procedure (ETAD-H0930-00) ■ Mating/Unmating Operation Instruction Manual (ETAD-H0997-00) ■ User Guide for Wire-to-Board Connector

Dec.1.2021 Copyright 2021 HIROSE ELECTRIC CO., LTD. All Rights Reserved.

HIROSE ELECTRIC CO.,LTD.
2-6-3,Nakagawa Chuoh,Tsuzuki-Ku,Yokohama-Shi 224-8540,JAPAN
TEL: +81-45-620-3526 Fax: +81-45-591-3726
http://www.hirose.com
http://www.hirose-connectors.com

The characteristics and the specifications contained herein are for reference purpose. Please refer to the latest customer drawings prior to use.
The contents of this catalog are current as of date of 02/2021. Contents are subject to change without notice for the purpose of improvements.