SIGN	DATE	DESCRIPTION	APPROVER
1	2010.12.08	Added "cULus" standard	Chen Bo
2	2012.02.23	Flange nut is changed	Aaron
3	2012.02.23	The dimension is added	Aaron
4	2012.02.23	The material is changed from Brass to Copper	Aaron
5	2014.06.05	change the dimension from 1.70 to 1.00	Ji long
6	2014.11.13	update drawing	Evan

THIS IS CAD DRAWING, DO NOT REVISE MANUALLY!!!

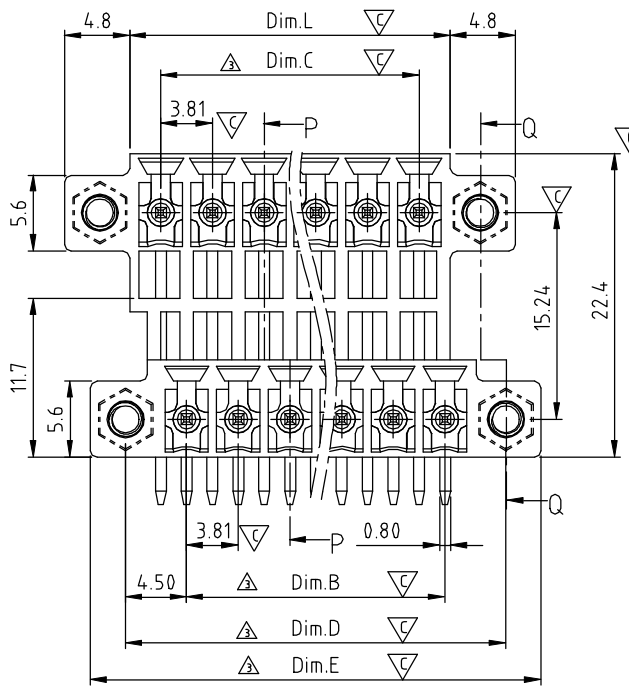

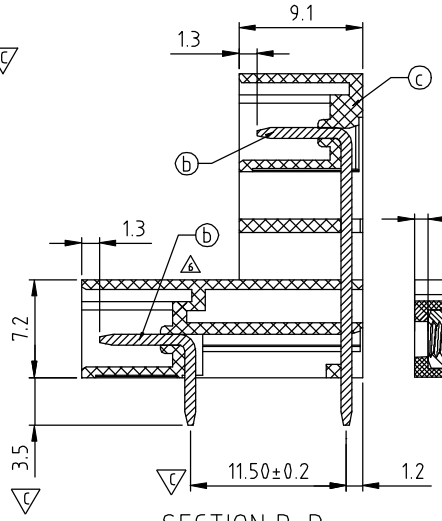

SECTION P-P

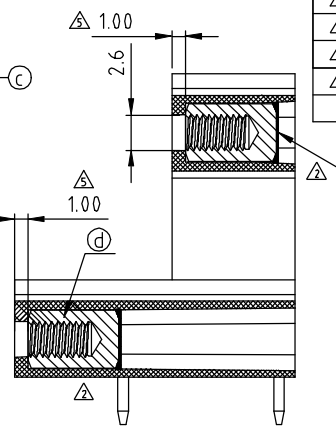

SECTION Q-Q

Fill the glue

Material

- 4 Item ⓐ Long contact pin: Copper ,Tin plated
- 4 Item ⓑ Short contact pin: Copper ,Tin plated
- Item ⓒ Terminal (housing): Thermoplastic (UL94V-0)
- Item ⓓ With flange nut: Brass ,M2.5

Electrical

- Voltage rating: 300VAC
- Current rating: 10A
- Withstanding Voltage: 1.6KV
- Operating temperature: -40°C to +115°C
- Soldering temperature: 260°C±5°C/5 Sec
- 1 Safety Approval: c UL us
- Critical dimension: C

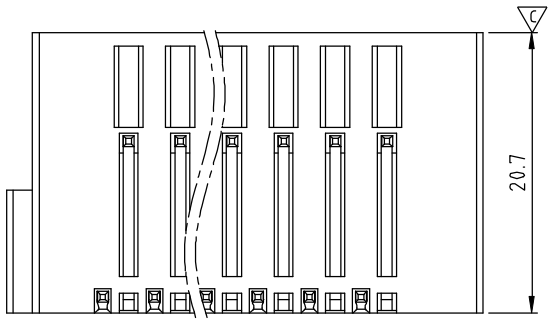

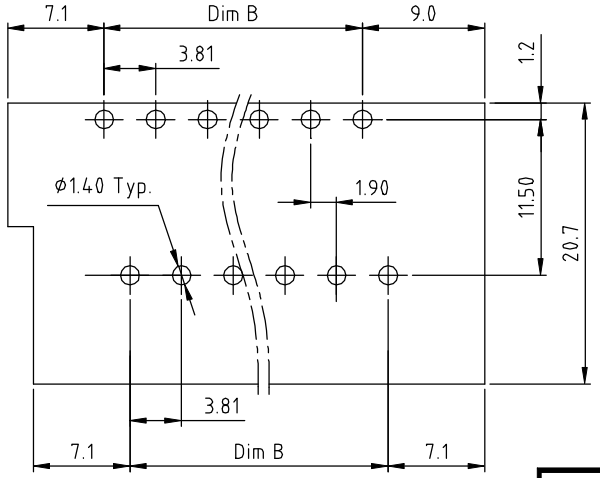

RECOMMENDED PCB LAYOUT

TOP VIEW

VF xx 3 2 x 1 xxxx G

No. OF POLES
04: 2×2 POLES
⋮
6 24: 2×12 POLES

Color
0 Black (RAL9005)
2 Red (RAL3001/D)
3 Orange(RAL2011/P)
4 Yellow(RAL1018/A)
5 Green(RAL6018/T)
6 Blue (RAL5015/A)
8 Grey(RAL7035/D)
9 White(RAL1102)
C Green(RAL6018/U)

0000: "@" Logo (Standard)
000A: "ANYTEK" Mark
Any special item by customer requst. please contact sales department.

RoHS compliant (lead<4%) In copper Alloy

Dimension 6

	Dim.L	(N/2)x3.81+0.79
	Dim.B	(N/2-1) x 3.81
3	Dim.C	(N/2-1) x 3.81
3	Dim.D	((N/2)+1)x3.81+1.38
3	Dim.E	(N/2+2)x3.81+2.77

N= number of poles

Poles	Tolerance
2×2P-2×5P	±0.15
2×6P-2×10P	±0.20
2×11P-2×12P	±0.25

6

ANYTEK

CUSTOMER COPY

ALL RIGHTS RESERVED. REPRODUCTION OR ISSUE TO THIRD PARTIES IN ANY FORM WHATEVER IS NOT PERMITTED WITHOUT WRITTEN AUTHORITY FROM THE PROPRIETOR. PROPERTY OF ANYTEK TECHNOLOGY CO., LTD

TITLE	VF-3.81 Series 2×2P-2×16P Right angle (With flange)				
PART NO.	VFxx32x1xxxxG			DWG NO.	8VF0203
APPROVED	CHECKED	DESIGNED	DRAWN	CUST NO.	
		Evan 11/13`14	Evan 11/13`14	UNIT: mm	SCALE: NONE
				SHEET: 01/01	REV.: F

Tolerance	
X.	±0.50
X.X	±0.30
X.XX	±0.10
X°	±1°