SIGN	DATE	DESCRIPTION	APPROVER
1	9/17'10	How to older is changed	Runner
2	05/27`11	Voltage rating is changed from 160 V to 300 V	Steven
3	05/27`11	Withstanding Voltage is changed from 1.32 Kv to 1.6 Kv	Steven
4	05/27`11	Add "cULus" Safety Approval logo	Steven
THIS IS CAD DRAWING, DO NOT REVISE MANUALLY!!!			

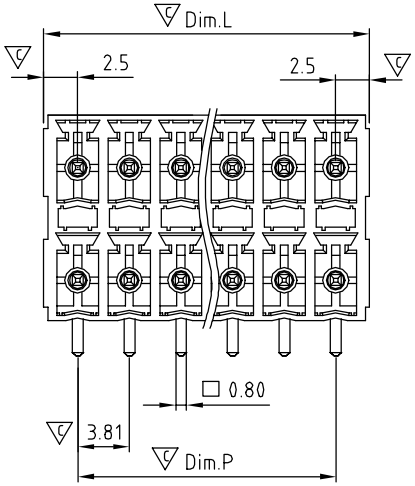

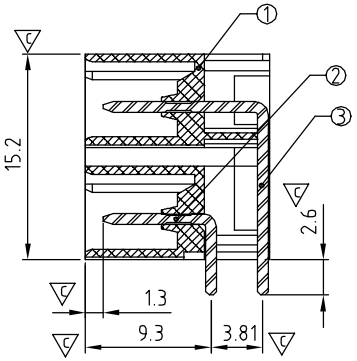

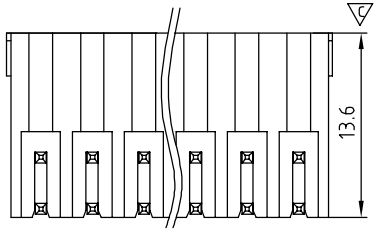

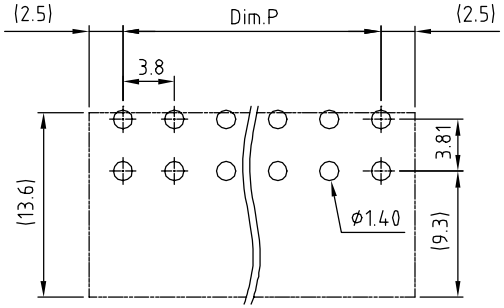

PCB Layout

Material:

- Item ① Terminal housing: PA66 30% GF (UL94V-0)
- Item ② Contact pin of short: Copper Tin plated
- Item ③ Contact pin of long: Copper Tin plated

Electrical:	cULus
2 Voltage rating:	300V
Current rating:	5.5A
3 Withstanding Voltage:	1.6KV
Operating temperature:	-40°C to +115°C
Soldering temperature:	250°C ±10°C/5 Sec
4 Safety Approval:	c us
Critical dimension:	▽

KE xx 3 1 x 1 xxxx G

No. OF POLES
04: 2×2 POLES
06: 2×3 POLES
:
:
48: 2×24 POLES

COLOR
0 Black (RAL9005)
2 Red (RAL3001/D)
3 Orange(RAL2011/P)
4 Yellow(RAL1018/A)
5 Green(RAL6018/T)
6 Blue (RAL5015/A)
8 Grey(RAL7035/D)

G: Pb<40000ppm

A00 0: "@" Mark
1 A00 A: "ANYTEK" Mark
Any special item by customer requst. please contact sales department.

DIMENSION

Dim.L	(N/2-1) × 3.81+5.0
Dim.P	(N/2-1) × 3.81

N = Number of poles

	TOL		
	2×2P-2×5P	2×6P-2×16P	2×17P-2×24P
Dim.L	±0.20	±0.30	±0.40
Dim.P	±0.15	±0.25	±0.30

ANYTEK

CUSTOMER COPY

ALL RIGHTS RESERVED. REPRODUCTION OR ISSUE TO THIRD PARTIES IN ANY FORM WHATEVER IS NOT PERMITTED WITHOUT WRITTEN AUTHORITY FROM THE PROPRIETOR. PROPERTY OF ANYTEK TECHNOLOGY CO., LTD

TITLE	KE 3.81mm W/o Flange Series (Right angle) DIP type				
PART NO.	KExx31x1xxxxG			DWG NO.	8KE0307
APPROVED	CHECKED	DESIGNED	DRAWN	CUST NO.	
		Steven 2011.05.27	Runner 2010.04.12	UNIT: mm / SCALE: NONE / SHEET: 01/01 / REV.: D	

Tolerance	
X.	±0.50
X.X	±0.30
X.XX	±0.10
X°	±1°