REVISION BO

DO NOT SCALE FROM THIS PRINT

TABLE 2	
BODY SPECIFICATION	
ROW/OPTION	USE BODY
-S, -S-NA/-NE	HTSW-50-S-LCP
-S-RA/-S-RE	HTSW-50-SRA-LCP
-D, -D-NA/NE	HTSW-50-D-LCP
-D-RA	HTSW-50-DRA-LCP
-T, -T-NA/-NE	HTSW-50-T-LCP
-T-RA, -Q-RA	HTSW-50-TRA-LCP
-Q	HTSW-50-T-LCP

HTSW-XXX-XX-XXX-X-XX-XX-XX

TERMINAL SPACE SPEC
-1= .100 [2.54] (FILL EVERY POSITION)
-2= .200 [5.08] (FILL EVERY OTHER POSITION STARTING WITH THE 1st AND ENDING WITH THE LAST POSITION IN BODY)

NUMBER OF POSITIONS
-1: -01 THRU -50
"A"= NUMBER OF POS x .100[2.54]
-2: -02 THRU -25
"A"= (NUMBER OF POS x .200[5.08])-.100[2.54]

LEAD STYLE
SEE TABLE 1, SHT 6

PLATING SPECIFICATIONS
-G: 10µ" GOLD IN CONTACT AREA, 3µ" GOLD ON TAIL
-T: MATTE TIN CONTACT AND TAIL
-S: 30µ" SELECTIVE GOLD IN CONTACT AREA, MATTE TIN ON TAIL
-H: 30µ" HEAVY GOLD IN CONTACT AREA, 3µ" GOLD ON TAIL
-L: 10µ" LIGHT SELECTIVE GOLD IN CONTACT AREA, MATTE TIN ON TAIL
-F: 3µ" FLASH SELECTIVE GOLD IN CONTACT AREA, MATTE TIN ON TAIL
-E: 50µ" EXTRA HEAVY GOLD IN CONTACT AREA, 3µ" GOLD ON TAIL
(AVAILABLE ON LEAD STYLES -07, -08, -09 STRAIGHT AND -08-D-RA)
-TL: TIN/LEAD (90/10 ±5%) CONTACT AND TAIL,
(AVAILABLE ONLY ON LEAD STYLES -07, -08 & -09)
-TM: MATTE TIN CONTACT AND TAIL
-SM: 30µ" SELECTIVE GOLD IN CONTACT AREA, MATTE TIN ON TAIL
-LM: 10µ" LIGHT SELECTIVE GOLD IN CONTACT AREA, MATTE TIN ON TAIL
-FM: 3µ" FLASH SELECTIVE GOLD IN CONTACT AREA, MATTE TIN ON TAIL
-STL: 30µ" SELECTIVE GOLD IN CONTACT AREA, TIN/LEAD (90/10 ±5%) TAIL
-LTL: 10µ" LIGHT SELECTIVE GOLD IN CONTACT AREA, TIN/LEAD (90/10 +/-5%) TAIL,
(AVAILABLE ONLY ON LEAD STYLE -15)
-SS: 30µ" STRIPE SELECTIVE GOLD IN CONTACT AREA, MATTE TIN ONTAIL, (SEE NOTE 9)

OPTION 1
-BLANK: STRAIGHT (SEE FIG 1, SHT 2)
-RA: RIGHT ANGLE (SEE TABLE 3 & 4, FIG 5, SHT 4)
-RE: EXTENDED RIGHT ANGLE (SEE TABLE 3 & 4, FIG 5, SHT 4)
(SINGLE ROW ONLY)
-NA: RA OPTION WITH STRAIGHT OPTION BODY (SEE TABLE 3 & 4, FIG 5, SHT 4)
-NE: RE OPTION WITH STRAIGHT OPTION BODY (SEE TABLE 3 & 4, FIG 5, SHT 4)
-LC: LOCKING CLIP (4 POS MINIMUM; ONLY AVAILABLE ON:
LEAD STYLES -08 THRU -13 & -22, WITH ROW OPTIONS -S & -D;
BO N/A WITH -MW, -RA OR -RE OPTIONS; SEE FIG 2, SHT 2)
-LA: -RA OPTION WITH -LL OPTION (SEE SHT 3)
-LL: LOCKING LEAD (SEE FIG 4, SHT 3)
(N/A WITH -RE OR -NE OPTIONS)
(N/A IN SINGLE ROW, 1 OR 2 POSITIONS)

ROW SPECIFICATION (SEE TABLE 2)
-S: SINGLE
-D: DOUBLE
-T: TRIPLE
-Q: TRIPLE ROW, FILL OUTER ROWS ONLY

OPTION 2
-POLARIZING SPECIFICATION
XXX INDICATES POS TO BE OMITTED

OPTION 3
*-MW: METAL WASHER
(STRAIGHT TAIL OPTION ONLY)
(AVAILABLE ON 05, 06, 07. 08. 16, 17, 18, 22, 23,24, 25, 41 & 42 LEAD STYLES ONLY)
(N/A WITH -LC OPTION. 20 POS MIN, 30 POS MAX. SEE FIG 6, SHT 5)

**** - MW OPTION, DO NOT DESIGN IN. SAMTEC WILL ONLY SUPPORT EXISTING BUSINESS 2/12/02.***

CRITICAL DIMENSION INSPECTION INSTRUCTION TABLE	
ASSEMBLY OPERATION	IN-PROCESS INSPECTION
FILL	C1
MULTI-CUT	C2
RIGHT ANGLE	C4
RIGHT ANGLE	C5
RIGHT ANGLE	C6
CRIMP	C7
CPCs INTENTIONALLY DELETED:	C3

NOTES:

1. ⟐ REPRESENTS CRITICAL DIMENSION FOR STATISTICAL PROCESS CONTROL.
2. MINIMUM TERMINAL PUSHOUT FORCE: 3 LBS.
3. MAXIMUM HEIGHT VARIATION: .005[.127] (N/A ON -RA TAIL).
4. ASSEMBLE GOLD PLATE END AS SHOWN IN FIG 1.
5. STYLE -26: ROUND END OF PIN TO APPEAR ON BOTTOM (SEE FIG 7, SHT 6).
6. MINIMUM GOLD PLATED CONTACT AREA: .165[4.19] REF; PINS -18, -21 & -25: .050[1.27] REF.
7. CRIMP TWO PINS CLOSEST TO CENTER OF THE PART IF THERE IS A POLARIZED POSITION IN THE MIDDLE/CENTER.
8. MAXIMUM CUT FLASH: .010 [.25].
9. -SS PLATING OPTION ONLY AVAILABLE ON -07, -08, -09 STRAIGHT AND -08 -RA LEAD STYLES. MATES WITH SSQ, SSW, SSM, BCS, ESQ & ESW.
10. MEASURE FROM THE BEND RADIUS OF THE TERMINALS.
11. ORIENTATE PINS TO PREVENT BANDOLIER MARKS FROM SHOWING IN THE POST AREA. (SEE TABLE 6, SHT 7).

UNLESS OTHERWISE SPECIFIED, DIMENSIONS ARE IN INCHES.
TOLERANCES ARE:
DECIMALS ANGLES
.XX: ±.01 [.25] 2°
.XXX: ±.005 [.13]
.XXXX: ±.0020 [.051]

PROPRIETARY NOTE
THIS DOCUMENT CONTAINS INFORMATION CONFIDENTIAL AND PROPRIETARY TO SAMTEC, INC. AND SHALL NOT BE REPRODUCED OR TRANSFERRED TO OTHER DOCUMENTS OR DISCLOSED TO OTHERS OR USED FOR ANY PURPOSE OTHER THAN THAT WHICH IT WAS OBTAINED WITHOUT THE EXPRESSED WRITTEN CONSENT OF SAMTEC, INC.

samtec
520 PARK EAST BLVD, NEW ALBANY, IN 47150
PHONE: 812-944-6733 FAX: 812-948-5047
e-Mail info@SAMTEC.com code 55322

MATERIAL: DO NOT SCALE DRAWING SHEET SCALE: 3.5:1
INSULATOR: LCP, UL-94-V-0
COLOR: NATURAL

DESCRIPTION:
.025 SQ POST HI-TEMP TERMINAL STRIP ASSEMBLY

DWG. NO.
HTSW-XXX-XX-XXX-X-XX-XX-XX

F:\DWG\MISC\MKTG\HTSW-XXX-XX-XXX-X-XX-XX-XX-MKT.SLDDRW

BY: PURVIS 02/17/87 SHEET 1 OF 7

REVISION BO

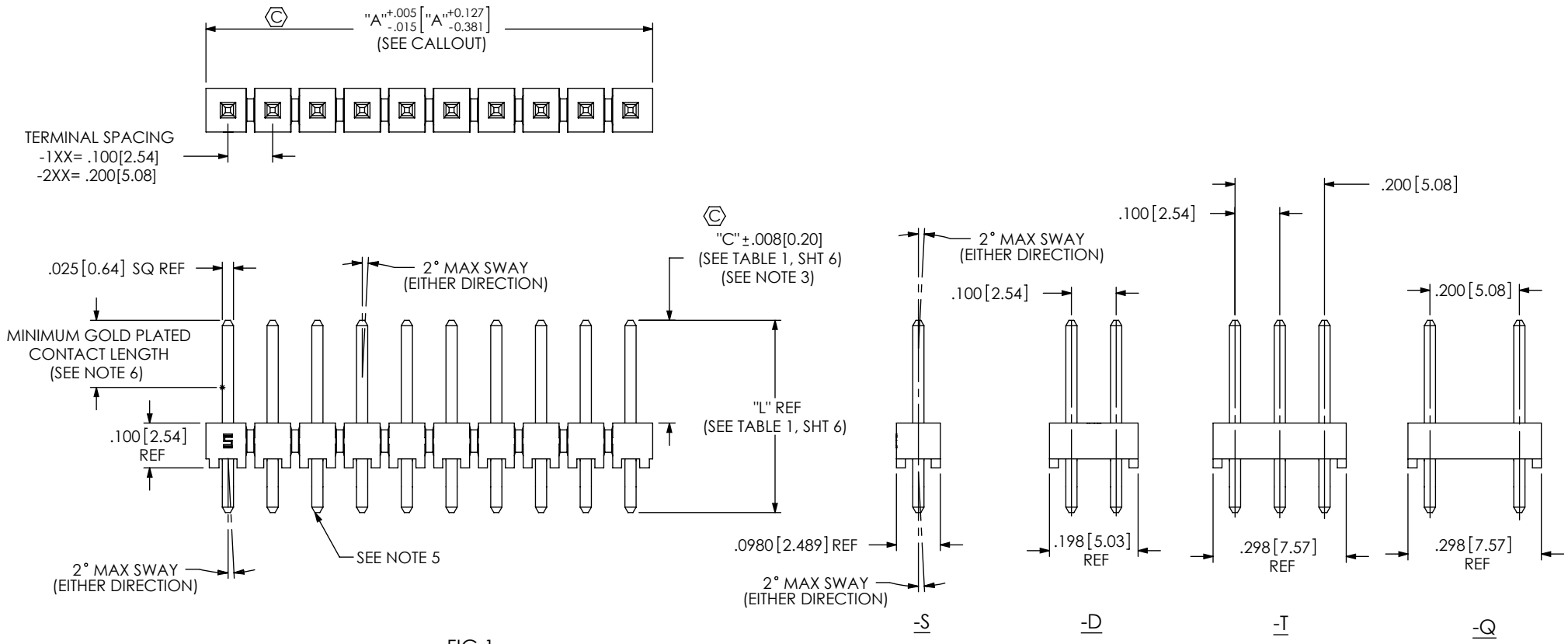

FIG 1
HTSW-110-07-XXX-D SHOWN

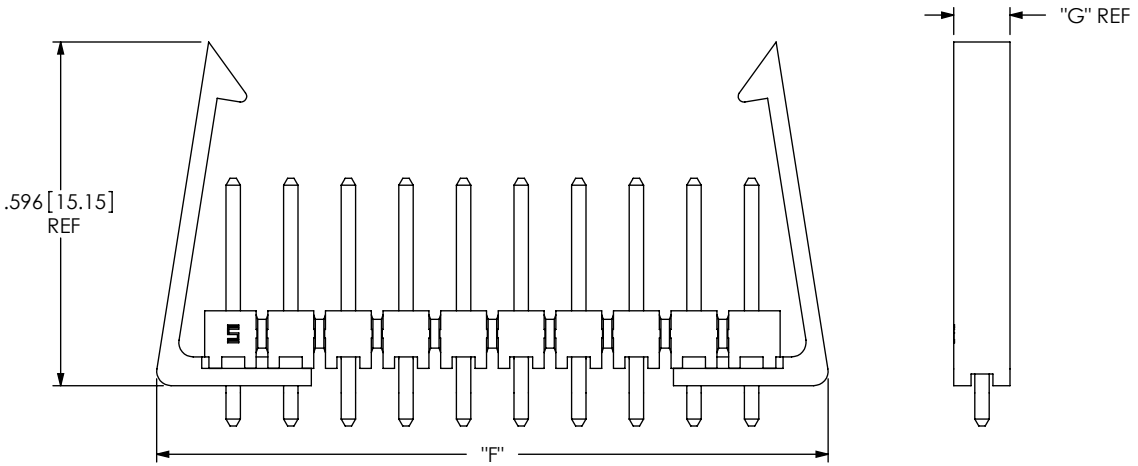

FIG 2: LOCKING CLIP
HTSW-110-07-XXX-D-LC SHOWN
(DIFFERENT AS SHOWN, OTHERWISE
SAME AS FIG 1)

TABLE 5: -LC OPTION

ROW	"F"+/-.015[.38]	"G"	LATCH
-D	"A"+.210[2.67]	.198[5.03]	LTC-02
-S	"A"+.150 [3.81]	.098[2.49]	LTC-01

F:\DWG\MISC\MKTG\HTSW-XXX-XX-XXX-X-XX-XX-XX-MKT.SLDDRW

PROPRIETARY NOTE

THIS DOCUMENT CONTAINS INFORMATION CONFIDENTIAL AND PROPRIETARY TO SAMTEC, INC. AND SHALL NOT BE REPRODUCED OR TRANSFERRED TO OTHER DOCUMENTS OR DISCLOSED TO OTHERS OR USED FOR ANY PURPOSE OTHER THAN THAT WHICH IT WAS OBTAINED WITHOUT THE EXPRESSED WRITTEN CONSENT OF SAMTEC, INC.

DO NOT SCALE DRAWING

SHEET SCALE: 3:1

samtec
520 PARK EAST BLVD, NEW ALBANY, IN 47150
PHONE: 812-944-6733 FAX: 812-948-5047
e-Mail info@SAMTEC.com code 55322

DESCRIPTION:
.025 SQ POST HI-TEMP TERMINAL STRIP ASSEMBLY

DWG. NO.
HTSW-XXX-XX-XXX-X-XX-XX-XX

BY: PURVIS 02/17/87

REVISION BO

FIG 3
TERMINAL SPACING
(DIFFERENT AS SHOWN, OTHERWISE SAME AS FIG 1)

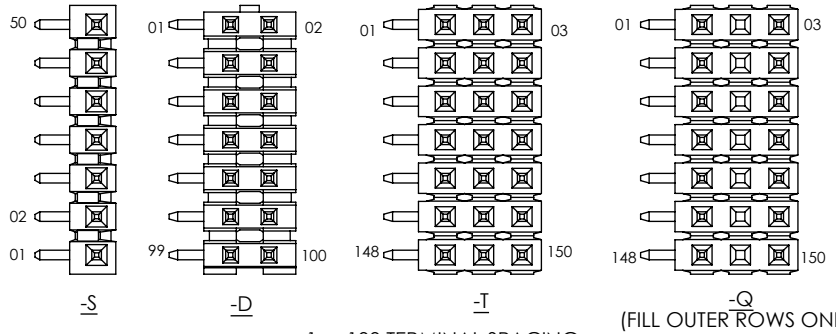

-1 = .100 TERMINAL SPACING

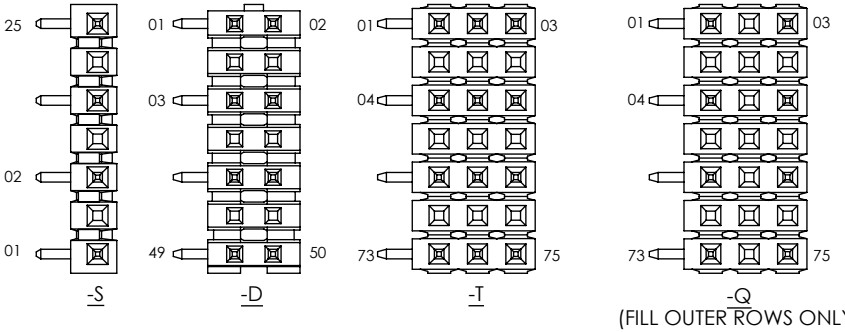

-2 = .200[5.08] TERMINAL SPACING

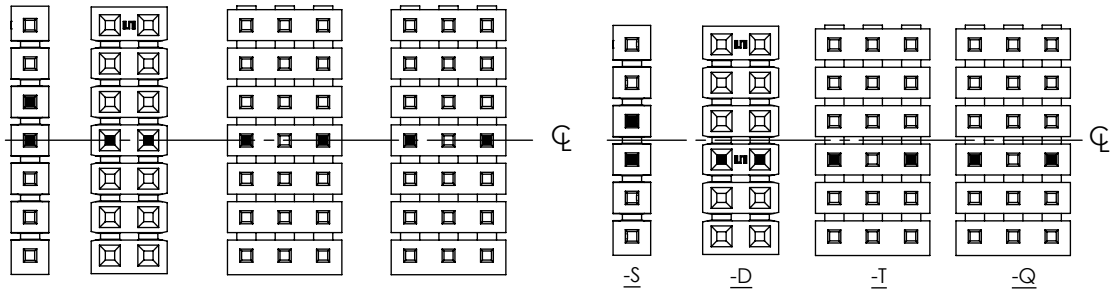

STRAIGHT VERSION
ODD POSITIONS

STRAIGHT VERSION
EVEN POSITIONS

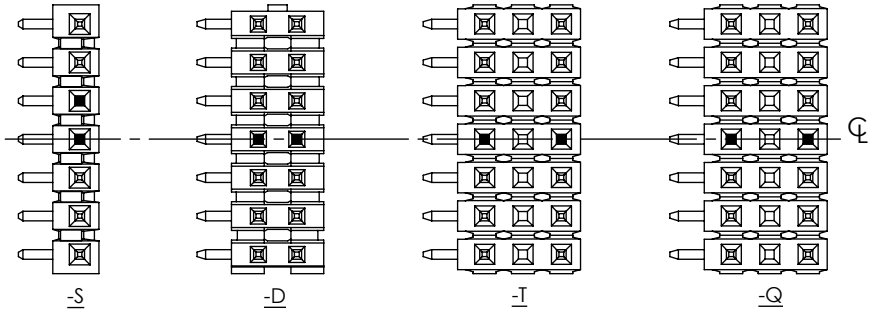

RIGHT ANGLE VERSION
ODD POSITIONS

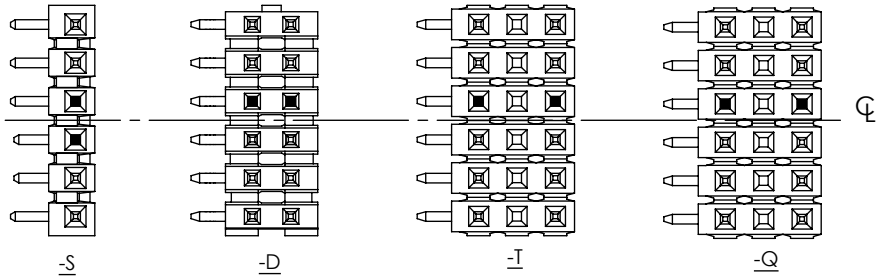

RIGHT ANGLE VERSION
EVEN POSITIONS

BO

BO -LL:LOCKING LEAD
■ = CRIMP LOCATION
TWO CENTER MOST PINS TO BE CRIMPED AS SHOWN.

FIG 4
-LL: LOCKING LEAD
(NOTE: END VIEWS SHOWN)
(DIFFERENT AS SHOWN, OTHERWISE SAME AS FIG 1)

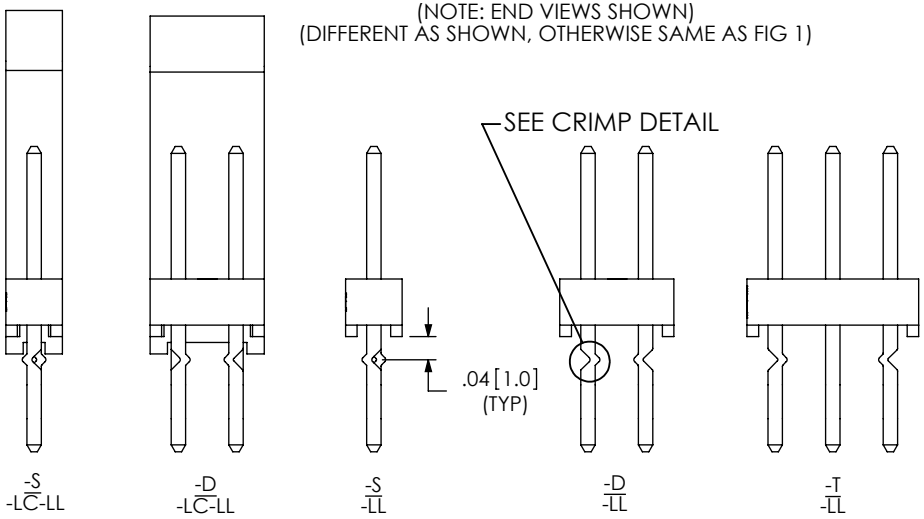

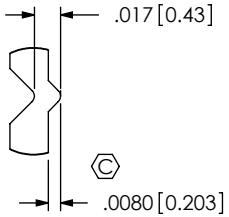

CRIMP DETAIL
SCALE: 2x
[TYP- ALL CRIMPS]

PROPRIETARY NOTE
THIS DOCUMENT CONTAINS INFORMATION CONFIDENTIAL AND PROPRIETARY TO SAMTEC, INC. AND SHALL NOT BE REPRODUCED OR TRANSFERRED TO OTHER DOCUMENTS OR DISCLOSED TO OTHERS OR USED FOR ANY PURPOSE OTHER THAN THAT WHICH IT WAS OBTAINED WITHOUT THE EXPRESSED WRITTEN CONSENT OF SAMTEC, INC.

DO NOT SCALE DRAWING

SHEET SCALE: 3:1

samtec
520 PARK EAST BLVD, NEW ALBANY, IN 47150
PHONE: 812-944-6733 FAX: 812-948-5047
e-Mail info@SAMTEC.com code 55322

DESCRIPTION:
.025 SQ POST HI-TEMP TERMINAL STRIP ASSEMBLY

DWG. NO.
HTSW-XXX-XX-XXX-X-XX-XX-XX

BY: PURVIS 02/17/87 SHEET 3 OF 7

F:\DWG\MISC\MKTG\HTSW-XXX-XX-XXX-X-XX-XX-XX-MKT.SLDDRW

REVISION BO

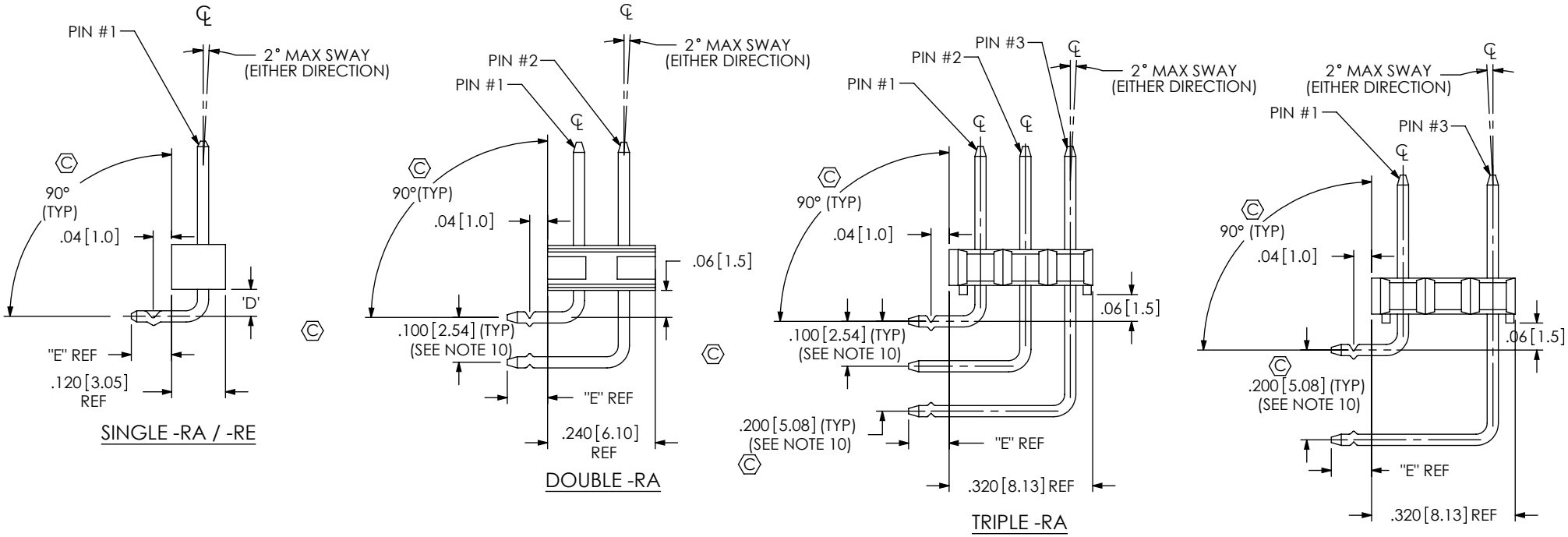

FIG 5
-RA: RIGHT ANGLE
(-LA OPTION IS SHOWN ON ALL -RA VIEWS
FOR DIMENSIONAL PURPOSES)
(SEE CRIMP DETAIL VIEW, SHT 3)
(DIFFERENT AS SHOWN, OTHERWISE SAME AS FIG 1)

TABLE 4 - "E"

LEAD STYLE	RA SINGLE	RE SINGLE	RA DOUBLE	RA TRIPLE	NA SINGLE	NE SINGLE	NA DOUBLE	NA TRIPLE
08	.090 [2.29]	N / A	.090 [2.29]	.090 [2.29]	.109 [2.77]	N / A	.109 [2.77]	.109 [2.77]
09	.290 [7.37]	.190 [4.83]	.290 [7.37]	.290 [7.37]	.309 [7.85]	.209 [5.31]	.309 [7.85]	.309 [7.85]
10	.390 [9.91]	.290 [7.37]	.390 [9.91]	.390 [9.91]	.409 [10.39]	.309 [7.85]	.409 [10.39]	.409 [10.39]
11	.490 [12.45]	.390 [9.91]	.490 [12.45]	.490 [12.45]	.509 [12.93]	.409 [10.39]	.509 [12.93]	.509 [12.93]
12	.590 [14.99]	.490 [12.45]	.590 [14.99]	.590 [14.99]	.609 [15.47]	.509 [12.93]	.609 [15.47]	.609 [15.47]
13	.790 [20.07]	.690 [17.53]	.790 [20.07]	N / A	.809 [20.55]	.709 [18.01]	.809 [20.55]	N / A
16	.200 [5.08]	.100 [2.54]	.200 [5.08]	.200 [5.08]	.219 [5.56]	.119 [3.02]	.219 [5.56]	.219 [5.56]
21	.990 [25.15]	.890 [22.61]	N / A	N / A	1.009 [25.63]	.909 [23.09]	N / A	N / A
22	.190 [4.83]	.090 [2.29]	.190 [4.83]	.190 [4.83]	.209 [5.31]	.109 [2.77]	.209 [5.31]	.209 [5.31]
25	.100 [2.54]	N / A	.100 [2.54]	.100 [2.54]	.119 [3.02]	N / A	.119 [3.02]	.119 [3.02]
27	.890 [22.61]	.790 [20.07]	N / A	N / A	.909 [23.09]	.809 [20.55]	N / A	N / A
28	.690 [17.53]	.590 [14.99]	.690 [17.53]	N / A	.709 [18.01]	.609 [15.47]	.709 [18.01]	N / A
29	.800 [20.32]	N / A	N / A	N / A	.819 [20.80]	N / A	N / A	N / A
30	.600 [15.24]	N / A	.600 [15.24]	N / A	.619 [15.72]	N / A	.619 [15.72]	N / A

TABLE 3	
-XX	"D"
-RA / -NA	.06 [1.5]
-RE / -NE	.16 [4.1]

PROPRIETARY NOTE
THIS DOCUMENT CONTAINS INFORMATION CONFIDENTIAL AND PROPRIETARY TO SAMTEC, INC. AND SHALL NOT BE REPRODUCED OR TRANSFERRED TO OTHER DOCUMENTS OR DISCLOSED TO OTHERS OR USED FOR ANY PURPOSE OTHER THAN THAT WHICH IT WAS OBTAINED WITHOUT THE EXPRESSED WRITTEN CONSENT OF SAMTEC, INC.

DO NOT SCALE DRAWING

SHEET SCALE: 4:1

samtec
520 PARK EAST BLVD, NEW ALBANY, IN 47150
PHONE: 812-944-6733 FAX: 812-948-5047
e-Mail info@SAMTEC.com code 55322

DESCRIPTION:
.025 SQ POST HI-TEMP TERMINAL STRIP ASSEMBLY

DWG. NO.
HTSW-XXX-XX-XXX-X-XX-XX-XX

BY: PURVIS 02/17/87 SHEET 4 OF 7

F:\DWG\MISC\MKTG\HTSW-XXX-XX-XXX-X-XX-XX-XX-MKT.SLDDRW

REVISION BO

 # - MW OPTION, DO NOT DESIGN IN. SAMTEC WILL ONLY SUPPORT EXISTING BUSINESS 2/12/02.

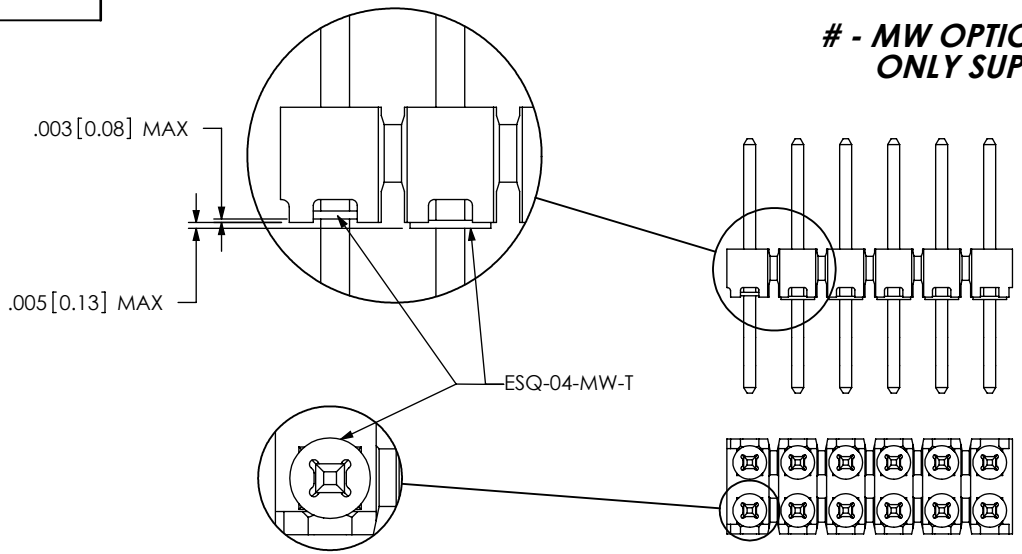

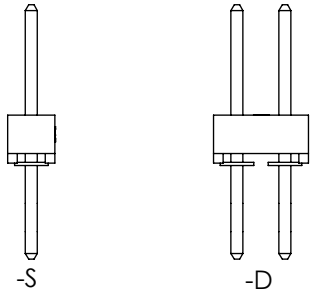

FIG 6
*-MW: METAL WASHER
(ONE PER POSITION)

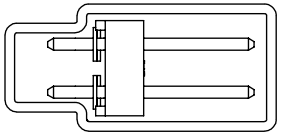

PT-1-24-01-22

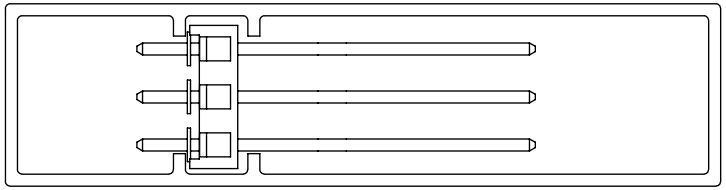

PT-1-24-07-51

-MW OPTION TUBE TABLE

STYLE	ROW	TUBE	PLUG
-XX	-S	PT-1-24-02-04	TP-24
-08 -16 -22 -25	-D	PT-1-24-03-29	TP-07
-05 -17 -18 -23 -24 -41 -42	-D	PT-1-24-08-03	TP-03
-06	-D	PT-1-24-01-63	TP-24-02
-07	-D	PT-1-24-01-22	TP-03
-XX	-T/-Q	PT-1-24-07-51	TP-07

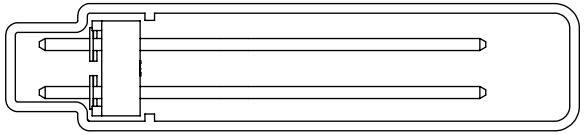

PT-1-24-08-03

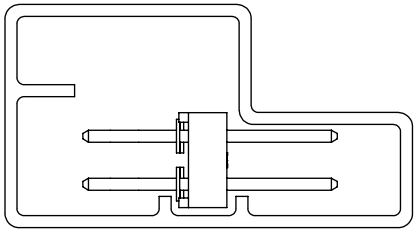

PT-1-24-03-29

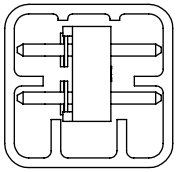

PT-1-24-01-63

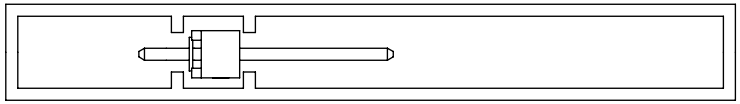

PT-1-24-02-04

F:\DWG\MISC\MKTG\HTSW-XXX-XX-XXX-X-XX-XX-XX-MKT.SLDDRW

PROPRIETARY NOTE

THIS DOCUMENT CONTAINS INFORMATION CONFIDENTIAL AND PROPRIETARY TO SAMTEC, INC. AND SHALL NOT BE REPRODUCED OR TRANSFERRED TO OTHER DOCUMENTS OR DISCLOSED TO OTHERS OR USED FOR ANY PURPOSE OTHER THAN THAT WHICH IT WAS OBTAINED WITHOUT THE EXPRESSED WRITTEN CONSENT OF SAMTEC, INC.

DO NOT SCALE DRAWING

SHEET SCALE: 2.5:1

samtec

520 PARK EAST BLVD, NEW ALBANY, IN 47150
PHONE: 812-944-6733 FAX: 812-948-5047
e-Mail info@SAMTEC.com code 55322

DESCRIPTION:
.025 SQ POST HI-TEMP TERMINAL STRIP ASSEMBLY

DWG. NO.
HTSW-XXX-XX-XXX-X-XX-XX-XX

BY: PURVIS 02/17/87 SHEET 5 OF 7

REVISION BO

TABLE 1						
TERMINAL SPECIFICATIONS						
TERMINAL SPEC	PIN #1	"L"	PIN #2 (2)	PIN #3	"C"	
-05 (3)	T-1S6-21-XXX-2	.335 [8.51]	N/A	N/A	.105 [2.67]	(5)
-06 (3)	T-1S6-18-XXX-2	.300 [7.62]	N/A	N/A	.105 [2.67]	(5)
-07 (3)	T-1S6-07-XXX-2	.430 [10.92]	N/A	N/A	.230 [5.84]	(5)
-08 (4)	T-1S6-08-XXX-2	.530 [13.46]	T-1S6-09-XXX-2	T-1S6-11-XXX-2	.230 [5.84]	(5) (6) (7)
-09	T-1S6-09-XXX-2	.730 [18.54]	T-1S6-11-XXX-2	T-1S6-20-XXX-2	.230 [5.84]	(6)
-10	T-1S6-10-XXX-2	.830 [21.08]	T-1S6-12-XXX-2	T-1S6-13-XXX-2	.230 [5.84]	
-11	T-1S6-11-XXX-2	.930 [23.62]	T-1S6-20-XXX-2	T-1S6-19-XXX-2	.230 [5.84]	
-12	T-1S6-12-XXX-2	1.030 [26.16]	T-1S6-13-XXX-2	T-1S6-14-XXX-2	.230 [5.84]	
-13	T-1S6-13-XXX-2	1.230 [31.24]	T-1S6-14-XXX-2	N/A	.230 [5.84]	
-14 (3)	T-1S6-08-XXX-2	.530 [13.46]	N/A	N/A	.320 [8.13]	(5)
-15 (3)	T-1S6-09-XXX-2	.730 [18.54]	N/A	N/A	.520 [13.21]	(5)
-16	T-1S6-09-XXX-2	.730 [18.54]	T-1S6-11-XXX-2	T-1S6-20-XXX-2	.320 [8.13]	(5) (6)
-17 (3)	T-1S6-10-XXX-2	.830 [21.08]	N/A	N/A	.620 [15.75]	(5)
-18 (3)	T-1S6-11-XXX-2	.930 [23.62]	N/A	N/A	.720 [18.29]	(5)
-19 (3)	T-1S6-12-XXX-2	1.030 [26.16]	N/A	N/A	.820 [20.83]	(5)
-20 (3)	T-1S6-13-XXX-2	1.230 [31.24]	N/A	N/A	1.020 [25.91]	(5)
-21	T-1S6-14-XXX-2	1.430 [36.32]	N/A	N/A	1.220 [30.99]	(5)
-21 (1)	T-1S6-14-XXX-2	1.430 [36.32]	N/A	N/A	.230 [5.84]	
-22	T-1S6-15-XXX-2	.630 [16.00]	T-1S6-10-XXX-2	T-1S6-12-XXX-2	.230 [5.84]	(5) (6)
-23 (3)	T-1S6-16-XXX-2	.445 [11.30]	N/A	N/A	.230 [5.84]	(5)
-24 (3)	T-1S6-17-XXX-2	.480 [12.19]	N/A	N/A	.265 [6.73]	(5)
-25 (4)	T-1S6-15-XXX-2	.630 [16.00]	T-1S6-10-XXX-2	T-1S6-12-XXX-2	.320 [8.13]	(5) (6)
*-26 (3)	T-1RS7-01-XXX-2	.456 [11.58]	N/A	N/A	.230 [5.84]	
-27	T-1S6-19-XXX-2	1.330 [33.78]	N/A	N/A	.230 [5.84]	
-28	T-1S6-20-XXX-2	1.130 [28.70]	T-1S6-19-XXX-2	N/A	.230 [5.84]	
-29 (4)	T-1S6-19-XXX-2	1.330 [33.78]	N/A	N/A	.320 [8.13]	
-30 (4)	T-1S6-20-XXX-2	1.130 [28.70]	T-1S6-19-XXX-2	N/A	.320 [8.13]	
-41	T-1S6-25-XXX-2	.365 [9.27]	N/A	N/A	.230 [5.84]	
-42	T-1S6-26-XXX-2	.470 [11.94]	N/A	N/A	.320 [8.13]	

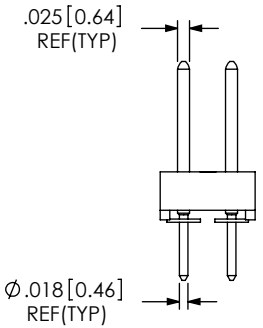

FIG 7
-26 LEAD STYLE
(SAME AS FIG 1, DIFFERENT AS SHOWN)

(1) WITH -RA or -RE OPTION
(2) OMIT WITH -Q ROW SPECIFICATION
(3) NOT AVAILABLE IN -RA OR -RE OPTION.
(4) NOT AVAILABLE IN -RE OPTION.
(5) AVAILABLE IN -LL OPTION.
(6) AVAILABLE IN -LA OPTION.
(7) ON STYLE -08 -RA & -LA OPTIONS ONLY; 'C' = .230+.005/-.008 [5.84+.13/-.20]
*SQUARE END OF PIN(T-1RS7-01-XXX-2)SHOULD BE LOCATED AT "C" DIMENSION DURING FILL PROCESS. (SEE FIG 7)

PROPRIETARY NOTE
THIS DOCUMENT CONTAINS INFORMATION CONFIDENTIAL AND PROPRIETARY TO SAMTEC, INC. AND SHALL NOT BE REPRODUCED OR TRANSFERRED TO OTHER DOCUMENTS OR DISCLOSED TO OTHERS OR USED FOR ANY PURPOSE OTHER THAN THAT WHICH IT WAS OBTAINED WITHOUT THE EXPRESSED WRITTEN CONSENT OF SAMTEC, INC.

DO NOT SCALE DRAWING

SHEET SCALE: 3.5:1

samtec
520 PARK EAST BLVD, NEW ALBANY, IN 47150
PHONE: 812-944-6733 FAX: 812-948-5047
e-Mail info@SAMTEC.com code 55322

DESCRIPTION:
.025 SQ POST HI-TEMP TERMINAL STRIP ASSEMBLY

DWG. NO.
HTSW-XXX-XX-XXX-X-XX-XX-XX

BY: PURVIS 02/17/87

F:\DWG\MISC\MKTG\HTSW-XXX-XX-XXX-X-XX-XX-XX-MKT.SLDDRW

REVISION BO

TABLE 6 (-T PLATING ONLY)							
	NUMBER OF BAND MARKS ALLOWED IN POST AREA				NUMBER OF BAND MARKS ALLOWED IN POST AREA		
LEAD STYLE	PIN #1	PIN #2	PIN #3	LEAD STYLE	PIN #1	PIN #2	PIN #3
*-05	*0	N/A	N/A	*-17	2	N/A	N/A
-06	1	N/A	N/A	*-18	2	N/A	N/A
-07	1	N/A	N/A	*-19	2	N/A	N/A
-08	0	0	0	*-20	2	N/A	N/A
-08 RA	0	0	0	*-21	2	N/A	N/A
-09	0	0	0	-21-RA	0	N/A	N/A
-09 RA	0	0	0	-21-RE	0	N/A	N/A
-09-RE	0	0	0	-22	0	0	0
-10	0	0	0	-22-RA	0	0	0
-10-RA	0	0	0	-22-RE	0	0	0
-10-RE	0	0	0	-23	1	N/A	N/A
-11	0	0	0	-24	1	N/A	N/A
-11-RA	0	0	0	-25	1	1	1
-11-RE	0	0	0	*-25-RA	1	0	0
-12	0	0	0	*-26	1	N/A	N/A
-12-RA	0	0	0	*-27	0	N/A	N/A
-12-RE	0	0	0	*-27-RA	0	N/A	N/A
-13	0	0	N/A	*-27-RE	0	N/A	N/A
-13-RA	0	0	N/A	*-28	0	0	N/A
-13-RE	0	0	N/A	*-28-RA	0	0	N/A
-14	1	N/A	N/A	*-28-RE	0	0	N/A
*-15	2	N/A	N/A	*-29	1	N/A	N/A
*-16	1	1	1	*-29-RA	1	N/A	N/A
*-16-RA	1	1	1	*-30	1	1	N/A
*-16-RE	1	1	1	*-30-RA	1	1	N/A

* PINS TO BE FLIPPED OPPOSITE OF SELECTIVE PLATING BEFORE BEING INSERTED

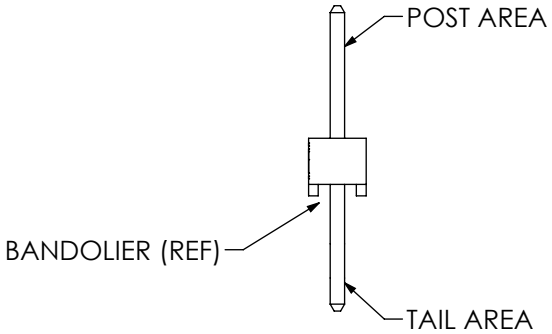

IN PROCESS 1
(SAME AS FIG. 1, DIFFERENT AS SHOWN)
-T PLATING ONLY

PROPRIETARY NOTE
THIS DOCUMENT CONTAINS INFORMATION CONFIDENTIAL AND PROPRIETARY TO SAMTEC, INC. AND SHALL NOT BE REPRODUCED OR TRANSFERRED TO OTHER DOCUMENTS OR DISCLOSED TO OTHERS OR USED FOR ANY PURPOSE OTHER THAN THAT WHICH IT WAS OBTAINED WITHOUT THE EXPRESSED WRITTEN CONSENT OF SAMTEC, INC.

DO NOT SCALE DRAWING

SHEET SCALE: 3:1

samtec
520 PARK EAST BLVD, NEW ALBANY, IN 47150
PHONE: 812-944-6733 FAX: 812-948-5047
e-Mail info@SAMTEC.com code 55322

DESCRIPTION:
.025 SQ POST HI-TEMP TERMINAL STRIP ASSEMBLY

DWG. NO.
HTSW-XXX-XX-XXX-X-XX-XX-XX

BY: PURVIS 02/17/87

F:\DWG\MISC\MKTG\HTSW-XXX-XX-XXX-X-XX-XX-XX-MKT.SLDDRW