RoHS Available

1500 Watt Low Capacitance Transient Voltage Suppressor

Screening in reference to MIL-PRF-19500 available

DESCRIPTION

This hermetically sealed Transient Voltage Suppressor (TVS) product family includes a rectifier diode element in series and in the opposite direction. This allows it to present a very low (< 100 pF) capacitance to the system it is protecting (see Figure 2). The low capacitance of these devices makes them particularly useful for protecting lines carrying high frequency signals. They are also useful in protecting from the secondary effects of lightning in airborne avionics per IEC61000-4-5, RTCA/DO-160G, and ARINC 429. If bidirectional transient capability is required, two of these low capacitance TVS devices may be used in parallel in opposite directions (anti-parallel) for complete ac protection as shown in Figure 4.

Important: For the latest information, visit our website http://www.microsemi.com.

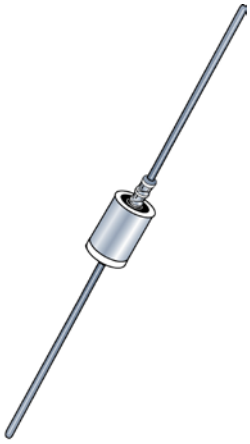

DO-202AA (DO-13) Package

FEATURES

- Unidirectional low-capacitance TVS series for flexible thru-hole mounting.
- For bidirectional applications, use two in anti-parallel (see Figure 4).
- Suppresses transients up to 1500 watts @ 10/1000 µs (see Figure 1).
- Clamps transients in less than 100 pico seconds (theoretical for unidirectional).*
- Working voltage (V_{WM}) range 6.5 V to 170 V.
- 5% and 10% tolerance versions available.
- Hermetic sealed DO-13 metal package.
- Screening options available in reference to MIL-PRF-19500. (See Part Nomenclature for all available options.)
- RoHS compliant versions available.

*measurement limitation

Also available in:

Case 1 package
(plastic equivalent)
LCE6.5 – LCE170A

DO-215AB package
(Gull wing surface mount)
SMCGLCE6.5 – SMCGLCE170A

DO-214AB package
(J-bend surface mount)
SMCJLCE6.5 – SMCJLCE170A

APPLICATIONS / BENEFITS

- Protection from switching transients and induced RFI.
- Low capacitance for data line protection up to 1 MHz.
- Protection for fast data rate lines in aircraft up to:
  - RTCA/DO-160G Level 5 Waveform 4 and Level 2 Waveform 5A (also see MicroNote 130)
  - ARINC 429, Part 1, paragraph 2.4.1.1 up to bit rates of 100 kb/s
- ESD & EFT protection per IEC 61000-4-2 and -4-4.
- Secondary lightning protection per IEC61000-4-5 with 42 ohms source impedance:
  Class 1: LC6.5 to LC170A
  Class 2: LC6.5 to LC150A
  Class 3: LC6.5 to LC70A
  Class 4: LC6.5 to LC36A
- Secondary lightning protection per IEC61000-4-5 with 12 ohms source impedance:
  Class 1 : LC6.5 to LC90A
  Class 2: LC6.5 to LC45A
  Class 3: LC6.5 to LC22A
  Class 4: LC6.5 to LC11A
- Secondary lightning protection per IEC61000-4-5 with 2 ohms source impedance:
  Class 2: LC6.5 to LC20A
  Class 3: LC6.5 to LC10A
- Inherently radiation hard as described in Microsemi MicroNote 050.

MSC – Lawrence
6 Lake Street,
Lawrence, MA 01841
Tel: 1-800-446-1158 or
(978) 620-2600
Fax: (978) 689-0803

MSC – Ireland
Gort Road Business Park,
Ennis, Co. Clare, Ireland
Tel: +353 (0) 65 6840044
Fax: +353 (0) 65 6822298

Website:
www.microsemi.com

©2013 Microsemi Corporation

MAXIMUM RATINGS

Parameters/Test Conditions	Symbol	Value	Unit
Junction and Storage Temperature	T_J and T_{STG}	-65 to +175	ºC
Thermal Resistance, Junction to Lead @ 0.375 inch (10 mm) from body	$R_{\Theta JL}$	50	ºC/W
Thermal Resistance, Junction to Ambient (1)	$R_{\Theta JA}$	110	ºC/W
Peak Pulse Power @ T_L = +25 ºC (2)	P_{PP}	1500	W
Power Dissipation @ $T_L \leq$ +125 ºC (3)	P_D	1	W
Solder Temperature @ 10 s	T_{SP}	260	°C

Notes:
1. When mounted on FR4 PC board with 4 mm^2 copper pads (1 oz) and track width 1 mm, length 25 mm.
2. At 10/1000 µs with repetition rate of 0.01% or less (see Figure 1).
3. At 3/8 inch (10 mm) from body. TVS devices are not typically used for dc power dissipation and are instead operated at or less than their rated standoff voltage (V_{WM}) except for transients that briefly drive the device into avalanche breakdown (V_{BR} to V_C region). Also see Figures 2, 3 and 4 for further protection details in rated peak pulse power for unidirectional and bidirectional configurations respectively.

MECHANICAL and PACKAGING

- CASE: Welded, hermetically sealed metal and glass.
- TERMINALS: Tin-lead plated or RoHS compliant annealed matte-tin plating. Solderable per MIL-STD-750 method 2026.
- MARKING: Part number and polarity diode symbol.
- POLARITY: Cathode connected to case and polarity indicated by diode symbol.
- TAPE & REEL option: Standard per EIA-296 (add "TR" suffix to part number). Consult factory for quantities.
- WEIGHT: Approximately 1.4 grams.
- See Package Dimensions on last page.

PART NOMENCLATURE

MQ LC 6.5 A (e3)

Reliability Level
MQ (reference JAN)
MX (reference JANTX)
MV (reference JANTXV)
MSP (reference JANS)
Blank = Commercial

Low Capacitance

RoHS Compliance
e3 = RoHS compliant
Blank = non-RoHS compliant

Tolerance Level
A = +/- 5 %
blank = +/- 10 %

Reverse Standoff Voltage (V_{WM})
(See Electrical Characteristics table)

SYMBOLS & DEFINITIONS

Symbol	Definition
$I_{(BR)}$	Breakdown Current: The current used for measuring breakdown voltage $V_{(BR)}$.
$V_{(BR)}$	Breakdown Voltage: This is the breakdown voltage the device will exhibit at 25 °C.
V_{WM}	Rated Working Standoff Voltage: The maximum peak voltage that can be applied over the operating temperature range.
V_C	Maximum Clamping Voltage: The maximum peak voltage appearing across the TVS when subjected to the peak pulse current in a one millisecond time interval. The peak pulse voltage is the combination of voltage rise due to both the series resistance and thermal rise and positive temperature coefficient ($\alpha_{V(BR)}$).
I_{PP}	Peak Impulse Current: The peak current during the impulse.
P_{PP}	Peak Pulse Power: The pulse power as determined by the product of V_C and I_{PP}.
I_D	Standby Current: The current at the standoff voltage V_{WM}.

©2013 Microsemi Corporation

ELECTRICAL CHARACTERISTICS @ 25 °C

PART NUMBER	RATED WORKING STANDOFF VOLTAGE V_{WM} Volts	BREAKDOWN VOLTAGE $V_{(BR)}$ Volts MIN	MAX	@ $I_{(BR)}$ mA	MAXIMUM STANDBY CURRENT I_D @V_{WM} µA	MAXIMUM CLAMPING VOLTAGE V_C @ I_{PP} Volts	MAXIMUM PEAK IMPULSE CURRENT I_{PP} @ 10/1000 µs Amps	MAXIMUM CAPACI-TANCE C @ 0 Volts, f = 1 MHz pF	WORKING INVERSE BLOCKING VOLTAGE V_{WIB} Volts	INVERSE BLOCKING LEAKAGE CURRENT I_{IB} @ V_{WIB} µA	PEAK INVERSE BLOCKING VOLTAGE VOLTS V_{PIB} Volts
LC6.5	6.5	7.22	8.82	10	1000	12.3	100	100	75	10	100
LC6.5A	6.5	7.22	7.98	10	1000	11.2	100	100	75	10	100
LC7.0	7.0	7.78	9.51	10	500	13.3	100	100	75	10	100
LC7.0A	7.0	7.78	8.60	10	500	12.0	100	100	75	10	100
LC7.5	7.5	8.33	10.2	10	250	14.3	100	100	75	10	100
LC7.5A	7.5	8.33	9.21	10	250	12.9	100	100	75	10	100
LC8.0	8.0	8.89	10.9	1	100	15.0	100	100	75	10	100
LC8.0A	8.0	8.89	9.83	1	100	13.6	100	100	75	10	100
LC8.5	8.5	9.44	11.5	1	50	15.9	94	100	75	10	100
LC8.5A	8.5	9.44	10.4	1	50	14.4	100	100	75	10	100
LC9.0	9.0	10.0	12.2	1	10	16.9	89	100	75	10	100
LC9.0A	9.0	10.0	11.1	1	10	15.4	97	100	75	10	100
LC10	10	11.1	13.6	1	5	18.8	80	100	75	10	100
LC10A	10	11.1	12.3	1	5	17.0	88	100	75	10	100
LC11	11	12.2	14.9	1	5	20.1	74	100	75	10	100
LC11A	11	12.2	13.5	1	5	18.2	82	100	75	10	100
LC12	12	13.3	16.3	1	5	22.0	68	100	75	10	100
LC12A	12	13.3	14.7	1	5	19.9	75	100	75	10	100
LC13	13	14.4	17.6	1	5	23.8	63	100	75	10	100
LC13A	13	14.4	15.9	1	5	21.5	70	100	75	10	100
LC14	14	15.6	19.1	1	5	25.8	58	100	75	10	100
LC14A	14	15.6	17.2	1	5	23.2	65	100	75	10	100
LC15	15	16.7	20.4	1	5	26.9	56	100	75	10	100
LC15A	15	16.7	18.5	1	5	24.4	61	100	75	10	100
LC16	16	17.8	21.8	1	5	28.8	52	100	75	10	100
LC16A	16	17.8	19.7	1	5	26.0	57	100	75	10	100
LC17	17	18.9	23.1	1	5	30.5	49	100	75	10	100
LC17A	17	18.9	20.9	1	5	27.6	54	100	75	10	100
LC18	18	20.0	24.4	1	5	32.2	46	100	75	10	100
LC18A	18	20.0	22.1	1	5	29.2	51	100	75	10	100
LC20	20	22.2	27.1	1	5	35.8	42	100	75	10	100
LC20A	20	22.2	24.5	1	5	32.4	46	100	75	10	100
LC22	22	24.4	29.8	1	5	39.4	38	100	75	10	100
LC22A	22	24.4	26.9	1	5	35.5	42	100	75	10	100
LC24	24	26.7	32.6	1	5	43.0	35	100	75	10	100
LC24A	24	26.7	29.5	1	5	38.9	39	100	75	10	100
LC26	26	28.9	35.3	1	5	46.6	32	100	75	10	100
LC26A	26	28.9	31.9	1	5	42.1	36	100	75	10	100
LC28	28	31.1	38.0	1	5	50.1	30	100	75	10	100
LC28A	28	31.1	34.4	1	5	45.4	33	100	75	10	100
LC30	30	33.3	40.7	1	5	53.5	28	100	75	10	100
LC30A	30	33.3	36.8	1	5	48.4	31	100	75	10	100
LC33	33	36.7	44.9	1	5	58.0	25.4	100	75	10	100
LC33A	33	36.7	40.6	1	5	53.3	28.1	100	75	10	100
LC36	36	40.0	48.9	1	5	64.3	23.3	100	75	10	100
LC36A	36	40.0	44.2	1	5	58.1	25.8	100	75	10	100
LC40	40	44.4	54.3	1	5	71.4	21.0	100	75	10	100
LC40A	40	44.4	49.1	1	5	64.5	23.3	100	75	10	100
LC43	43	47.8	58.4	1	5	76.7	19.5	100	150	10	200
LC43A	43	47.8	52.8	1	5	69.4	21.6	100	150	10	200
LC45	45	50.0	61.1	1	5	80.3	18.7	100	150	10	200
LC45A	45	50.0	55.3	1	5	72.7	20.6	100	150	10	200
LC48	48	53.3	65.1	1	5	85.5	17.5	100	150	10	200
LC48A	48	53.3	58.9	1	5	77.4	19.4	100	150	10	200
LC51	51	56.7	69.3	1	5	91.1	16.5	100	150	10	200
LC51A	51	56.7	62.7	1	5	82.4	18.2	100	150	10	200

continued

©2013 Microsemi Corporation

ELECTRICAL CHARACTERISTICS @ 25 °C (continued)

PART NUMBER	RATED WORKING STANDOFF VOLTAGE V_{WM}	BREAKDOWN VOLTAGE			MAXIMUM STANDBY CURRENT I_D @V_{WM}	MAXIMUM CLAMPING VOLTAGE V_C @ I_{PP}	MAXIMUM PEAK IMPULSE CURRENT I_{PP} @ 10/1000 µs	MAXIMUM CAPACI-TANCE C @ 0 Volts, f = 1 MHz	WORKING INVERSE BLOCKING VOLTAGE V_{WIB}	INVERSE BLOCKING LEAKAGE CURRENT I_{IB} @ V_{WIB}	PEAK INVERSE BLOCKING VOLTAGE VOLTS V_{PIB}
		$V_{(BR)}$ Volts		@ $I_{(BR)}$							
	Volts	MIN	MAX	mA	µA	Volts	Amps	pF	Volts	µA	Volts
LC54	54	60.0	73.3	1	5	96.3	15.6	100	150	10	200
LC54A	54	60.0	66.3	1	5	87.1	17.2	100	150	10	200
LC58	58	64.4	78.7	1	5	103.0	14.6	100	150	10	200
LC58A	58	64.4	71.2	1	5	93.6	16.0	100	150	10	200
LC60	60	66.7	81.5	1	5	107.0	14.0	90	150	10	200
LC60A	60	66.7	73.7	1	5	96.8	15.5	90	150	10	200
LC64	64	71.1	86.9	1	5	114.0	13.2	90	150	10	200
LC64A	64	71.1	78.6	1	5	103.0	14.6	90	150	10	200
LC70	70	77.8	95.1	1	5	125	12.0	90	150	10	200
LC70A	70	77.8	86.0	1	5	113	13.3	90	150	10	200
LC75	75	83.3	102.0	1	5	134	11.2	90	150	10	200
LC75A	75	83.3	92.1	1	5	121	12.4	90	150	10	200
LC80	80	88.7	108	1	5	142	10.6	90	150	10	200
LC80A	80	88.7	98.0	1	5	129	11.6	90	150	10	200
LC90	90	100	122	1	5	160	9.4	90	300	10	200
LC90A	90	100	111	1	5	146	10.3	90	300	10	200
LC100	100	111	136	1	5	179	8.4	90	300	10	200
LC100A	100	111	123	1	5	162	9.3	90	300	10	200
LC110	110	122	149	1	5	196	7.7	90	300	10	400
LC110A	110	122	135	1	5	178	8.4	90	300	10	400
LC120	120	133	163	1	5	214	7.0	90	300	10	400
LC120A	120	133	147	1	5	193	7.8	90	300	10	400
LC130	130	144	176	1	5	231	6.5	90	300	10	400
LC130A	130	144	159	1	5	209	7.2	90	300	10	400
LC150	150	167	204	1	5	268	5.6	90	300	10	400
LC150A	150	167	185	1	5	243	6.2	90	300	10	400
LC160	160	178	218	1	5	287	5.2	90	300	10	400
LC160A	160	178	197	1	5	259	5.8	90	300	10	400
LC170	170	189	231	1	5	304	4.9	90	300	10	400
LC170A	170	189	209	1	5	275	5.4	90	300	10	400

NOTE 1: TVS devices are normally selected according to the reverse standoff voltage (V_{WM}) which should be equal to or greater than the DC or peak operating voltage level.

©2013 Microsemi Corporation

GRAPHS

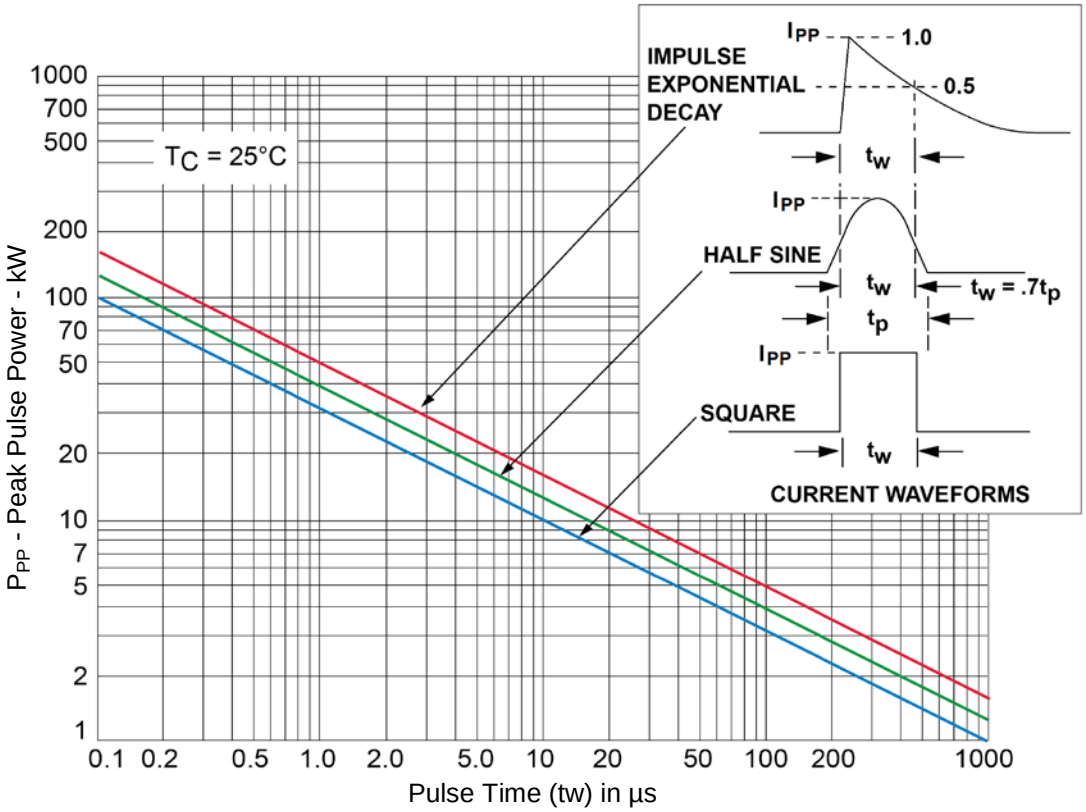

FIGURE 1
Peak Pulse Power vs Pulse Time (tw) in µs

©2013 Microsemi Corporation

PACKAGE DIMENSIONS

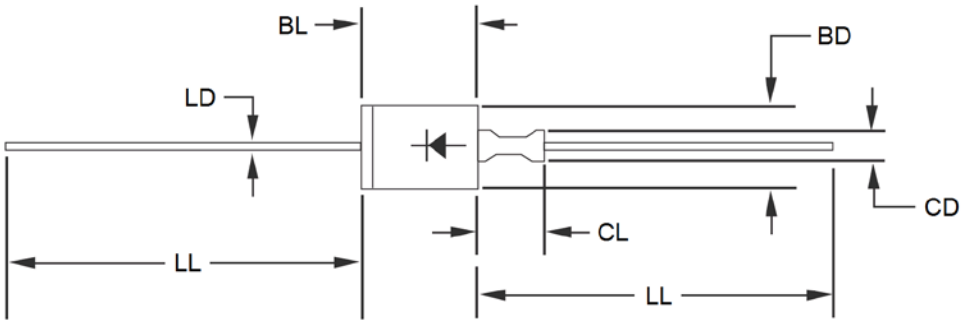

NOTES:

1. Dimensions are in inches.
2. Millimeter equivalents are given for information only.
3. The major diameter is essentially constant along its length.
4. Dimension to allow for pinch or seal deformation anywhere along tubulation.
5. Symbol for bidirectional transient suppressor.
6. Lead 1 is electrically connected to the case.
7. In accordance with ASME Y14.5M, diameters are equivalent to Φx symbology.

Symbol	Dimensions				Notes
	Inches		Millimeters		
	Min	Max	Min	Max	
BD	0.215	0.235	5.46	5.97	
BL	0.315	0.350	8.00	8.90	3
CD	0.045	0.100	1.14	2.54	4
CL	-	0.210	-	5.33	
LD	0.026	0.035	0.660	0.889	
LL	1.000	1.625	25.40	41.28	

APPLICATIONS SCHEMATIC

The TVS low capacitance device configuration is shown in figure 2. As a further option for unidirectional applications, an additional low capacitance rectifier diode may be used in parallel in the same polarity direction as the TVS as shown in figure 3. In applications where random high voltage transients occur, this will prevent reverse transients from damaging the internal low capacitance rectifier diode and also provide a low voltage conducting direction. The added rectifier diode should be of similar low capacitance and also have a higher reverse voltage rating than the TVS clamping voltage V_C. The Microsemi recommended rectifier part number is the "LCR80" for the application in figure 3. If using two (2) low capacitance TVS devices in anti-parallel for bidirectional applications, this added protective feature for both directions (including the reverse of each rectifier diode) is also provided. The unidirectional and bidirectional configurations in figure 3 and 4 will both result in twice the capacitance of figure 2.

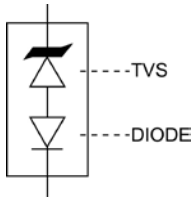

FIGURE 2
TVS with internal Low Capacitance Diode

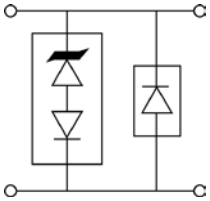

FIGURE 3
Optional Unidirectional configuration (TVS and separate rectifier diode in parallel)

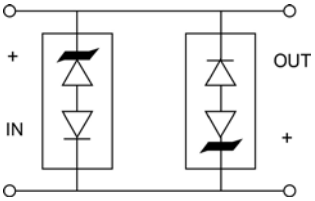

FIGURE 4
Optional Bidirectional configuration (two TVS devices in anti-parallel)

©2013 Microsemi Corporation