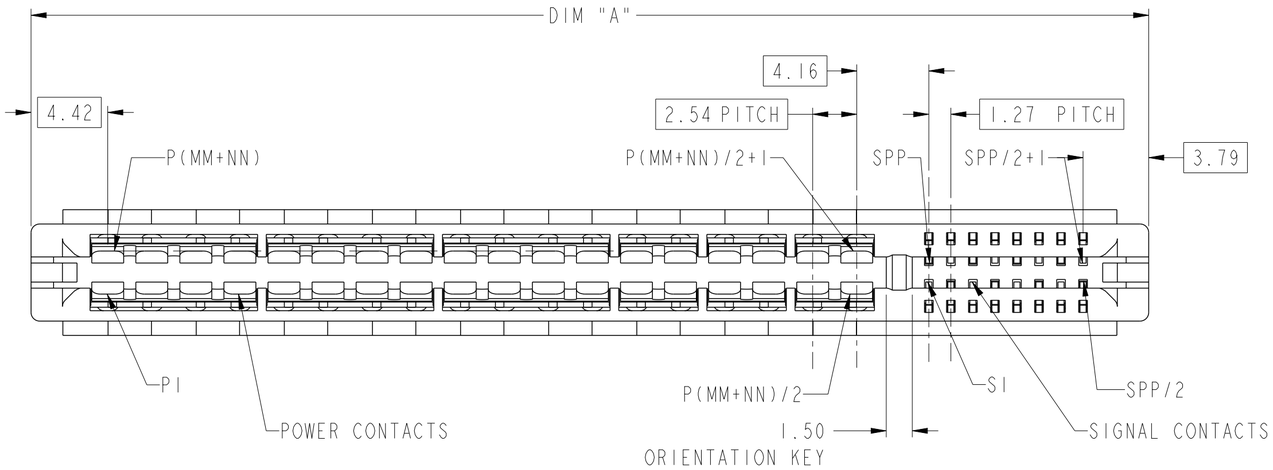

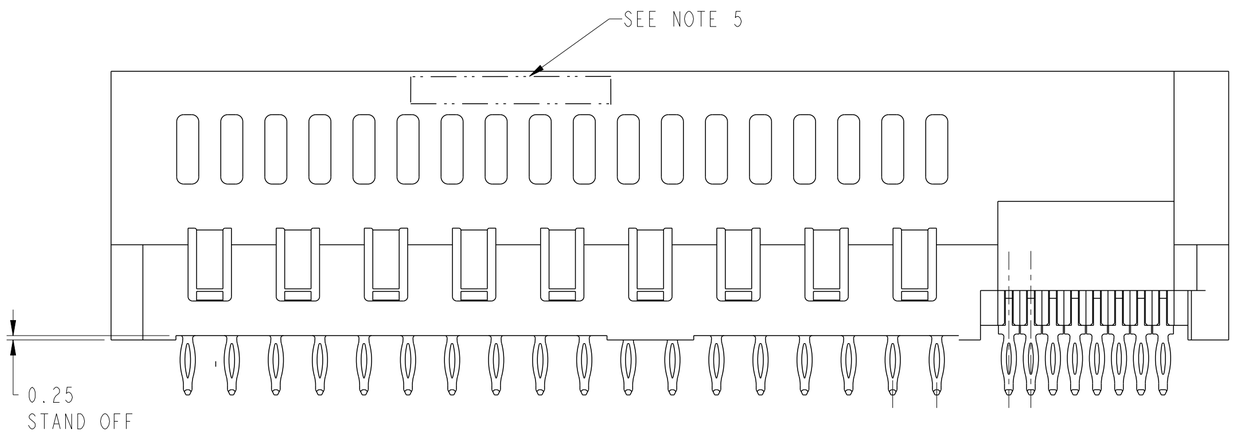

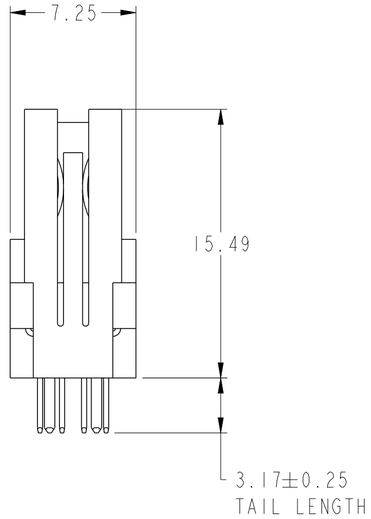

spec ref	-			dr	Jackie Huang	2014/10/31	projection	MM	size A2 / scale 5:1
tolerance std ISO 406 ISO 1101	TOLERANCES UNLESS OTHERWISE SPECIFIED			eng	Sunny2 Liu	2019/03/04			
				chr	Feng Zheng	2019/03/05			ecn no ELX-DG-28377-1
				appr	Zheng, Pei-Min	2019/03/05	product family	CARD EDGE	rel level Released
surface ISO 1302	linear	0.X	±0.5	Amphenol FCi	title HPCE MEZZANINE UNIVERSAL P+S		dwg no 10132153		rev C
		0.XX	±0.25						
		0.XXX	±0.10						
	angular	0°	±2°		cat. no. -		Product - Customer Drw		sheet 1 of 4

© 2016 AFCI

Creo File - REV E - 2016-02-12

CONTACT TYPE	TOP LAYER DESCRIPTION	TABLE I (HPCE / SOLDER TAILS) PLATED THROUGH-HOLE REQUIREMENTS				
		DRILLED HOLE DIAMETER	COPPER THICKNESS	TIN-LEAD THICKNESS	TIN THICKNESS	FINISHED HOLE DIAMETER
SIGNAL	TIN-LEAD	1.10-1.16 (1.15 DRILL)	0.025 - 0.050	0.005 - 0.015	--	0.94 - 1.10
	IMMERSION TIN	1.10-1.16 (1.15 DRILL)	0.025 - 0.050	--	0.9 - 1.5um	0.94 - 1.10
	COPPER	1.10-1.16 (1.15 DRILL)	0.025 - 0.050	--	--	0.94 - 1.10

CONTACT TYPE		TABLE I (HPCE / PRESS-FIT TAILS) PLATED THROUGH-HOLE REQUIREMENTS				
		DRILLED HOLE DIAMETER	COPPER THICKNESS	TIN-LEAD THICKNESS	TIN THICKNESS	FINISHED HOLE DIAMETER
POWER & SIGNAL	TIN-LEAD	0.81-0.86 (0.85 DRILL)	0.025 - 0.050	0.005 - 0.015	--	0.65 - 0.80
	IMMERSION TIN	0.81-0.86 (0.85 DRILL)	0.025 - 0.050	--	0.9 - 1.5um	0.70 - 0.80
	COPPER	0.81-0.86 (0.85 DRILL)	0.025 - 0.050	--	--	0.70 - 0.80

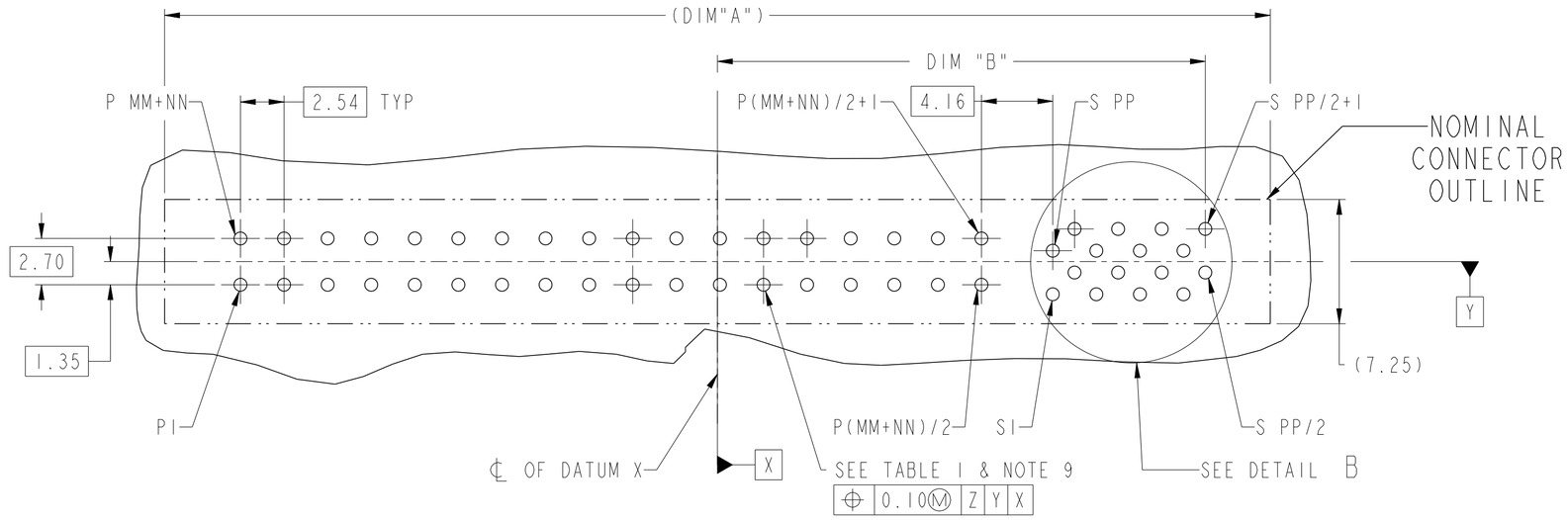

RECOMMENDED HOST BOARD LAYOUT

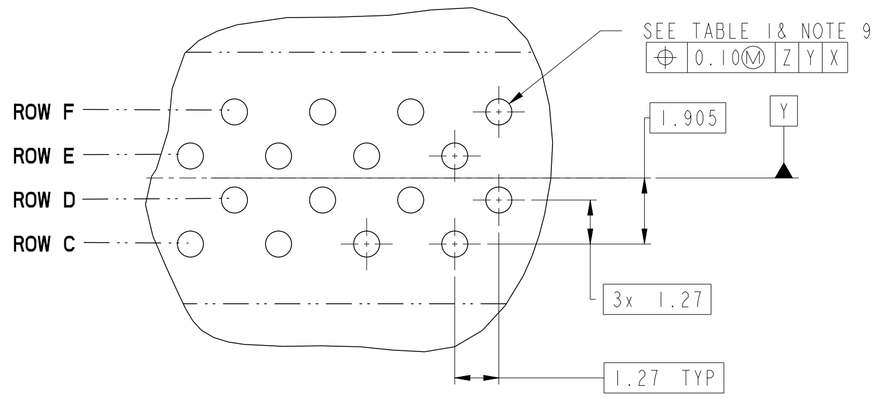

DETAIL B
SCALE 8:1

RECOMMENDED PCB LAYOUT
VIEWED FROM CONNECTOR SIDE

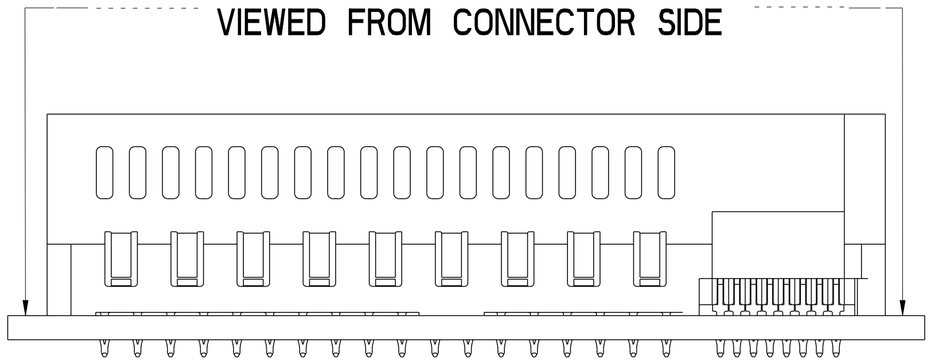

spec ref -			dr	Jackie Huang	2014/10/31	projection	MM
tolerance std ISO 406 ISO 1101	TOLERANCES UNLESS OTHERWISE SPECIFIED		eng	Sunny2 Liu	2019/03/04	size A2	scale 2:1
			chr	Feng Zheng	2019/03/05	ecn no	ELX-DG-28377-1
			appr	Zheng, Pei-Min	2019/03/05	product family -	rel level Released
surface - ISO 1302	linear	0.X	±0.5	Amphenol FCi	title HPCE MEZZANINE UNIVERSAL P+S	dwg no 10132153	rev C
		0.XX	±0.25				
		0.XXX	±0.10				
	angular	0°	±2°		cat. no. -	Product - Customer Drw	sheet 2 of 4

© 2016 AFCI

Creo File - REV E - 2016-02-12

DIM"L" (±0.25)	MEZZANINE STACK HEIGHT (±0.50)
21.02	32
22.02	33
23.02	34
24.02	35
25.02	36
26.02	37
27.02	38
28.02	39
29.02	40
30.02	41
31.02	42

TABLE 2

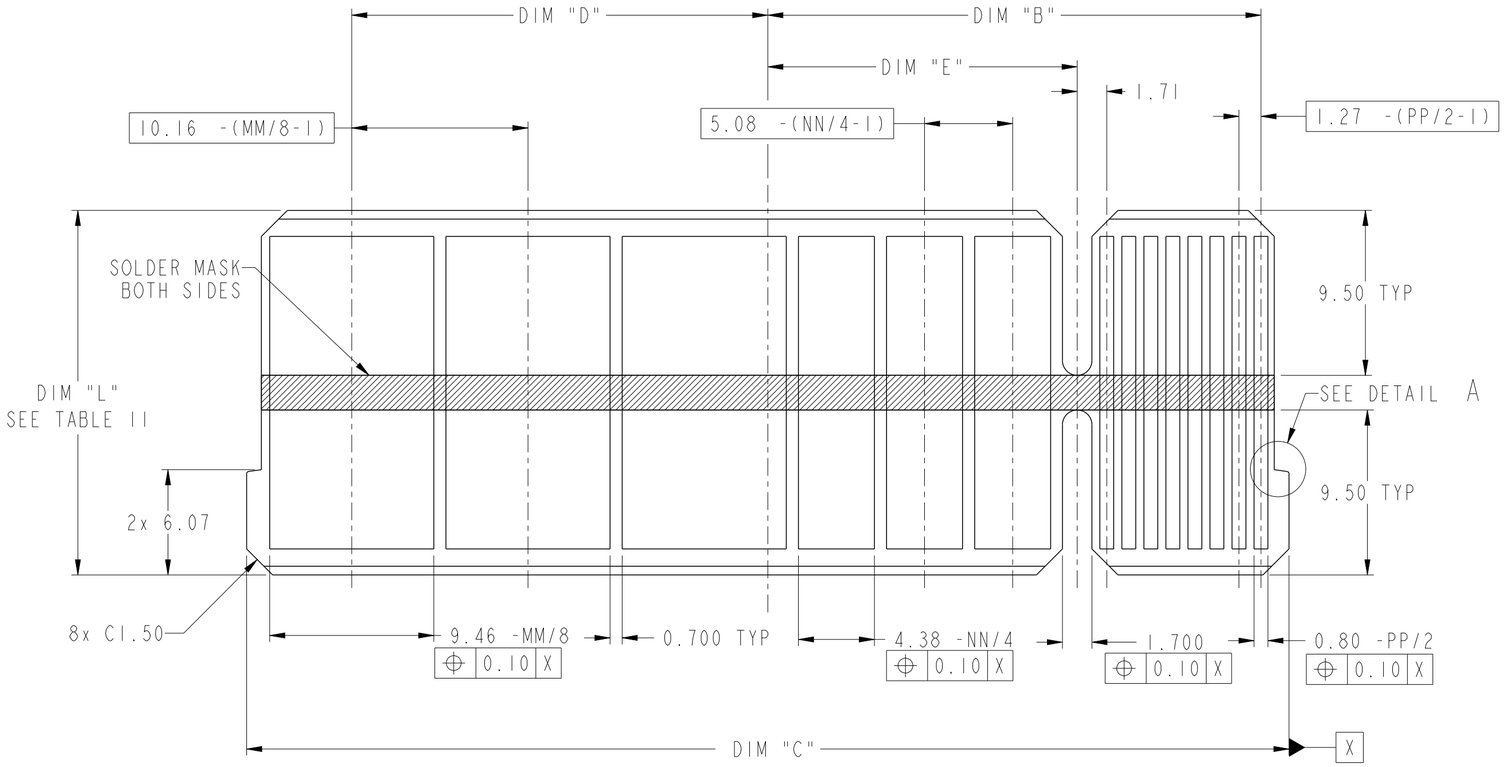

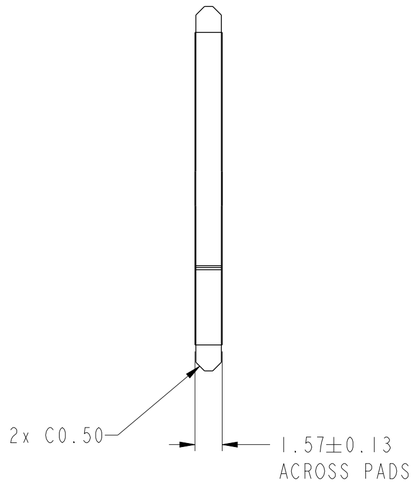

RECOMMENDED BRIDGE PCB

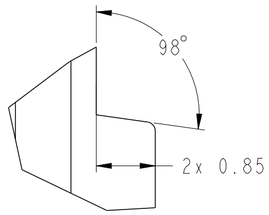

DETAIL A
SCALE 16:1

spec ref -			dr	Jackie Huang	2014/10/31	projection	MM
tolerance std ISO 406 ISO 1101	TOLERANCES UNLESS OTHERWISE SPECIFIED		eng	Sunny2 Liu	2019/03/04		
			chr	Feng Zheng	2019/03/05		
			appr	Zheng, Pei-Min	2019/03/05	product family -	
surface ISO 1302	linear	0.X	±0.5	Amphenol FCi	title HPCE MEZZANINE UNIVERSAL P+S	dwg no 10132153	rev C
		0.XX	±0.25				
		0.XXX	±0.10				
	angular	0°	±2°		cat. no. -	Product - Customer Drw	sheet 3 of 4

size	scale
A2	1:1
ecn no	ELX-DG-28377-1
rel level	Released

© 2016 AFCI

Creo File - REV E - 2016-02-12

10132153 - MM NN PP * LF

LEAD FREE

	A	B	C (△C)	D
ORIENTATION KEY	Y	N	Y	N
TAIL TYPE	PF	PF	STB	STB

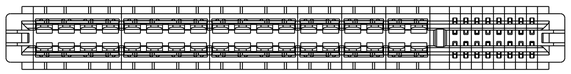

Example : The part number above is 10132153-320424ALF
that's 36P24S with orientation key configuration
32 is 4beam contact ; 04 is 2beam contact

Table 3 : PART NUMBER CODE

DIM	LENGTH FORMULAS
A	=[(MM+NN)/2] x 2.54 + (PP/2) x 1.27 + 8.55
B	= DIM "A"/2 - 3.79
C	= DIM "A" - 4.34
D	= DIM "A"/2 - 8.23
E	= DIM "A" /2 - (PP/2-1)X1.27 - 5.5

Table 4

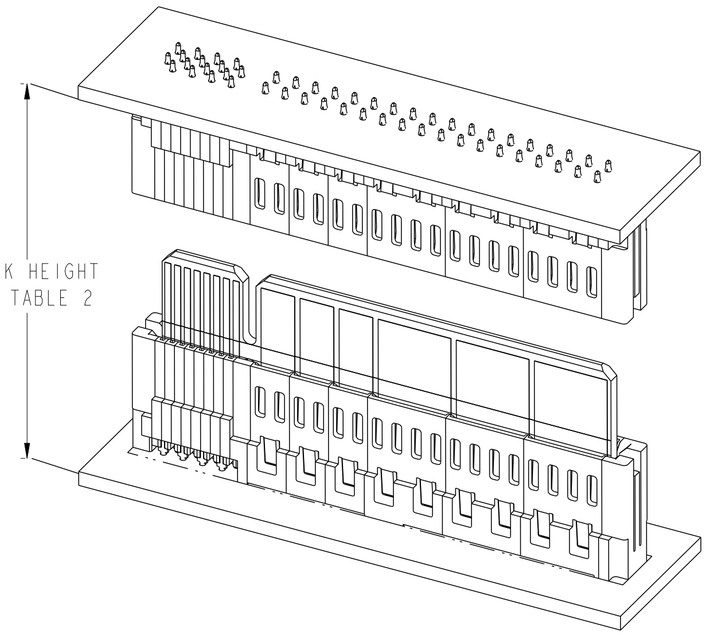

NOTES:

1. CONNECTOR MATERIALS:

   HOUSING: HIGH TEMPERATURE THERMAL PLASTIC, BLACK
   UL 94V-0 COMPLIANT
   CONTACTS: HIGH PERFORMANCE COPPER ALLOY.

2. CONTACT FINISH REF. GS-12-1261 SECTION 5.2.

3. PRODUCT SPECIFICATION: GS-12-1261.

4. APPLICATION SPECIFICATION: GS-20-128.

5. PRODUCT MARKING ON HOUSING IN AREA SHOWN MEETS AFCI SPECIFICATION: GS-24-007.

6. PACKAGING MEETS FCI SPECIFICATION GS-14-937.

7. HOUSING COMPONENT WILL WITHSTAND EXPOSURE TO 260°C PEAK TEMPERATURE FOR 60 SECONDS IN A CONVECTION, INFRA-RED, OR VAPOR PHASE REFLOW OVEN.

8. COPPER PLATING THICKNESS IN CENTER OF VIA-HOLE CAN BE NO MORE THAN 0.003 LESS THAN OTHER AREAS.

9. ALL HOLE SIZES ARE FINISHED HOLE SIZES.

10. A SYMBOL △C WILL BE NEXT TO ANY DIMENSION, VIEW, OR NOTE WHICH HAS BEEN MODIFIED WITH THE CURRENT DRAWING REVISION.

spec ref -			dr	Jackie Huang	2014/10/31	projection	MM
tolerance std ISO 406 ISO 1101	TOLERANCES UNLESS OTHERWISE SPECIFIED		eng	Sunny2 Liu	2019/03/04		
			chr	Feng Zheng	2019/03/05		
			appr	Zheng, Pei-Min	2019/03/05	product family -	
surface ✓ ISO 1302	linear	0.X	±0.5	Amphenol FCi	title HPCE MEZZANINE UNIVERSAL P+S	dwg no 10132153	rev C
		0.XX	±0.25				
		0.XXX	±0.10				
	angular	0°	±2°		cat. no. -	Product - Customer Drw	sheet 4 of 4

size A2 | scale 1:1 | ecn no ELX-DG-28377-1 | rel level Released

© 2016 AFCI

Creo File - REV E - 2016-02-12