RR7 Low ESR

High Ripple Current | Low Impedance | For High Frequency | Anti-Solvent Feature

- Ultra Low ESR, High ripple current.
- Load life of 2000 / 5000 hours at 105°C.
- Radial lead type : Lead free flow soldering condition correspondence.
- Compliant to the RoHS directive (2011/65/EU,(EU)2015/863).

RNS → Lower ESR → **RR7** → Lower ESR → RR5

RR7 → Lower Profile → RL8

FPCAP

■ Specifications

Item	Performance Characteristics	
Category Temperature Range	–55 to +105°C	
Rated Voltage Range	2.5 to 16V	
Rated Capacitance Range	68 to 1500μF	
Capacitance Tolerance	±20% at 120Hz, 20°C	
Tangent of loss angle (tan δ)	Less than or equal to the specified value at 120Hz, 20°C	
ESR (※1)	Less than or equal to the specified value at 100kHz, 20°C	
Leakage Current (※2)	Less than or equal to the specified value. After 2 minutes' application of rated voltage at 20°C	
Endurance	Test condition	105°C, rated voltage 2000 / 5000Hrs.
	Capacitance change	Within ±20% of initial value before test
	tan δ	150% or less than the initial specified value
	ESR(※1)	150% or less than the initial specified value
	Leakage current (※2)	Less than or equal to the initial specified value

※1 ESR should be measured at both of the terminal ends closest to the capacitor body.
※2 Conditioning : If any doubt arises, measure the leakage current after the voltage treatment of applying DC rated voltage continuously to the capacitor for 120 minutes at 105°C.

■ Dimensions

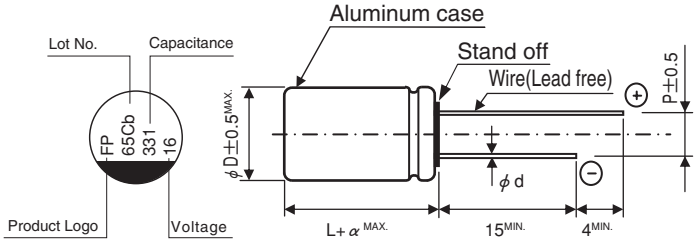

(mm)

φD×L	φd	P	α
8×11.5	0.6	3.5	1.5
10×12.5	0.6	5.0	1.5

Type numbering system (Example : 16V 330μF)
Nichicon part number

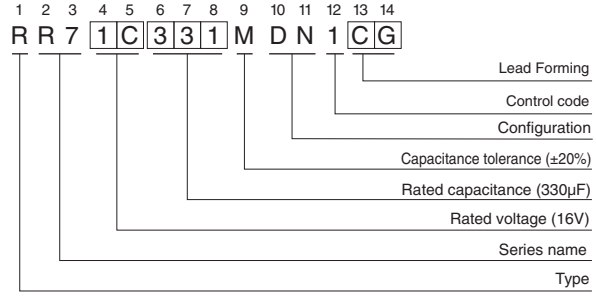

FPCAP part number

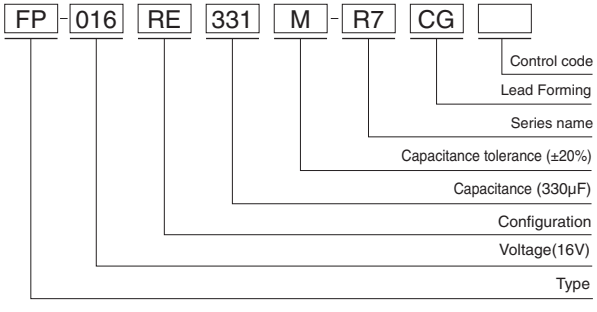

- Frequency coefficient of rated ripple current

Frequency	120 Hz	1 kHz	10 kHz	100 kHz	300 kHz
Coefficient	0.10	0.45	0.50	1.00	1.00

● Dimension table in next page.

RR7

■ Dimensions

Rated Voltage (V) (code)	Surge Voltage (V)	Rated Capacitance (μF)	Case Size φD×L (mm)	tan δ	Leakage Current (μA) (at 20°C after 2 minutes)	ESR (mΩ) (20°C/100kHz)	Rated Ripple Current (mArms) (105°C/100kHz)	NICHICON	FPCAP
2.5 (0E)	2.8	680	8×11.5	0.08	425	7	5600	RR70E681MDN1□□	FP-2R5RE681M-R7□□
		820	8×11.5	0.08	513	7	5600	RR70E821MDN1□□	FP-2R5RE821M-R7□□
		1500	10×12.5	0.08	938	7	6100	RR70E152MDN1□□	FP-2R5RE152M-R7□□
4.0 (0G)	4.6	560	8×11.5	0.08	224	7	5600	RR70G561MDN1□□	FP-4R0RE561M-R7□□
		820	10×12.5	0.08	328	7	6100	RR70G821MDN1□□	FP-4R0RE821M-R7□□
		1200	10×12.5	0.15	960	7	6100	RR70G122MDN1□□	FP-4R0RE122M-R7□□
6.3 (0J)	7.2	150	8×11.5	0.07	47	7	5600	RR70J151MDN1□□	FP-6R3RE151M-R7□□
		220	8×11.5	0.07	69	7	5600	RR70J221MDN1□□	FP-6R3RE221M-R7□□
		330	10×12.5	0.07	104	7	6100	RR70J331MDN1□□	FP-6R3RE331M-R7□□
		390	8×11.5	0.08	246	7	5600	RR70J391MDN1□□	FP-6R3RE391M-R7□□
		680	10×12.5	0.08	428	7	6100	RR70J681MDN1□□	FP-6R3RE681M-R7□□
		820	10×12.5	0.12	517	7	6100	RR70J821MDN1□□	FP-6R3RE821M-R7□□
		1000	10×12.5	0.12	630	7	6100	RR70J102MDN1□□	FP-6R3RE102M-R7□□
10 (1A)	11.5	100	8×11.5	0.07	50	7	5600	RR71A101MDN1□□	FP-010RE101M-R7□□
		220	10×12.5	0.07	110	7	6100	RR71A221MDN1□□	FP-010RE221M-R7□□
		470	10×12.5	0.08	470	7	6100	RR71A471MDN1□□	FP-010RE471M-R7□□
		680	10×12.5	0.10	1360	7	6100	RR71A681MDN1□□	FP-010RE681M-R7□□
16 (1C)	18.4	68	8×11.5	0.06	54	7	5600	RR71C680MDN1□□	FP-016RE680M-R7□□
		100	8×11.5	0.06	80	7	5600	RR71C101MDN1□□	FP-016RE101M-R7□□
		150	10×12.5	0.06	120	7	6100	RR71C151MDN1□□	FP-016RE151M-R7□□
		270	10×12.5	0.08	648	7	6100	RR71C271MDN1□□	FP-016RE271M-R7□□
		330	10×12.5	0.08	792	7	6100	RR71C331MDN1□□	FP-016RE331M-R7□□
		∗330	10×12.5	0.08	792	7	6100	RR71C331MDNASQ□□	FP-016RE331M-R7□□-5K

∗ : Load life 5000hours.

■ Frequency Characteristics (The frequency characteristics are typical and not a guaranteed value.)

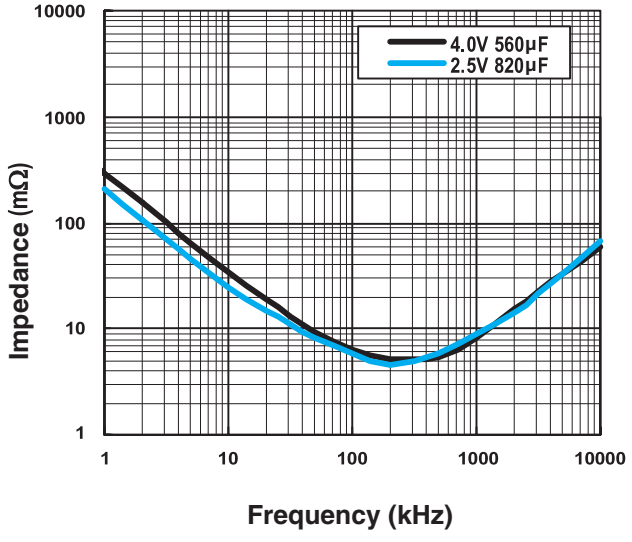

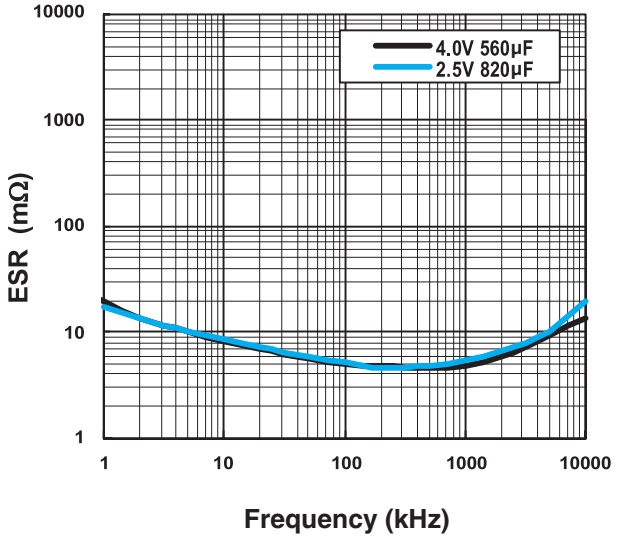

- For formed lead or taped product specifications and minimum order quantity, please refer to the Guidelines for Aluminum Electrolytic Capacitors.