10.16mm Pin Spacing – Pluggable PCB Blocks

Pin Spacing: 10.16mm
Orientation: Vertical Header
Clamp Type: –
Design: Single Mold - Closed End

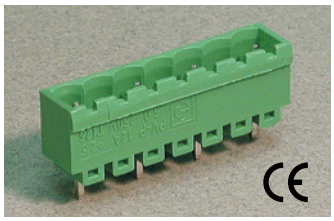

PVPxx-10.16

ELECTRICAL

	Current	Voltage	Wire Range
c UL us E178356	12A	600V	–
IEC	16A	750V	–

INSTALLATION DATA

Screw Size	–	**PCB Hole Size**	1.5mm
Torque	–	**Stripping Lgth.**	–

MATERIAL

Body	Polyamide	**Screw**	–
Flammability Class	UL94V-0	**Terminal**	Tin-Plated Brass
Temperature Limit	105˚C UL 125˚C IEC	**Clamp**	–
Color	Green		

No. Poles	Cat. #	Length (mm)	Std. Pk.
2	PVP02-10.16	17.2	100
3	PVP03-10.16	27.4	100
4	PVP04-10.16	37.6	50
5	PVP05-10.16	47.7	50
6	PVP06-10.16	57.9	50
7	PVP07-10.16	68.0	50
8	PVP08-10.16	78.2	50
9	PVP09-10.16	88.4	50
10	PVP10-10.16	98.5	50
11	PVP11-10.16	108.7	20
12	PVP12-10.16	118.8	20

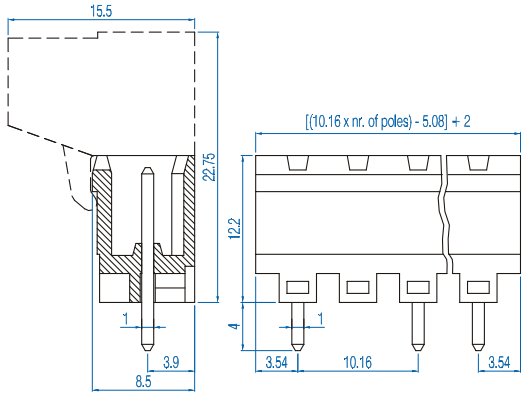

Pin Spacing: 10.16mm
Orientation: Horizontal Header
Clamp Type: –
Design: Single Mold - Closed End

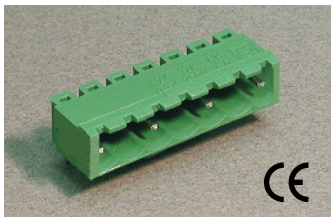

PHPxx-10.16

ELECTRICAL

	Current	Voltage	Wire Range
c UL us E178356	12A	600V	–
IEC	16A	750V	–

INSTALLATION DATA

Screw Size	–	**PCB Hole Size**	1.5mm
Torque	–	**Stripping Lgth.**	–

MATERIAL

Body	Polyamide	**Screw**	–
Flammability Class	UL94V-0	**Terminal**	Tin-Plated Brass
Temperature Limit	105˚C UL 125˚C IEC	**Clamp**	–
Color	Green		
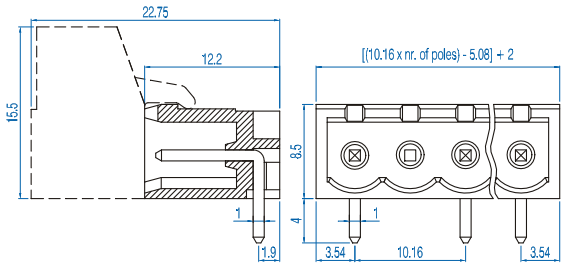
No. Poles	Cat. #	Length (mm)	Std. Pk.
2	PHP02-10.16	17.2	100
3	PHP03-10.16	27.4	100
4	PHP04-10.16	37.6	50
5	PHP05-10.16	47.7	50
6	PHP06-10.16	57.9	50
7	PHP07-10.16	68.0	50
8	PHP08-10.16	78.2	50
9	PHP09-10.16	88.4	50
10	PHP10-10.16	98.5	50
11	PHP11-10.16	108.7	20
12	PHP12-10.16	118.8	20