# High Voltage C0G Dielectric, 500 – 3,000 VDC (Automotive Grade)

## Overview

KEMET's Automotive Grade High Voltage surface mount MLCCs in C0G dielectric are temperature compensating and are suited for resonant circuit applications or those where Q and stability of capacitance characteristics are required. C0G exhibits no change in capacitance with respect to time and voltage and boasts a negligible change in capacitance with reference to ambient temperature. Capacitance change is limited to ±30ppm/°C from −55°C to +125°C.

Their exceptional performance at high frequencies has made C0G high voltage the preferred dielectric choice of design engineers worldwide. Whether under-hood or in-cabin, these capacitors are designed to provide reliable performance in mission and safety critical automotive circuits. Stricter testing protocol and inspection criteria have been established for automotive grade products in recognition of potentially harsh environmental conditions. KEMET automotive grade series capacitors meet the demanding Automotive Electronics Council's AEC-Q200 qualification requirements.

## Benefits

- AEC-Q200 automotive qualified
- Operating temperature range of −55°C to +125°C
- Capacitance offerings ranging from 1 pF to 0.15 µF
- DC voltage ratings of 500 V, 630 V, 1 KV, 1.5 KV, 2 KV, 2.5 KV and 3 KV
- EIA 0402, 0603, 0805, 1206, 1210, 1808, 1812, 1825, 2220, 2225, 2824, 3040, 3640 and 4540 case sizes
- Extremely low ESR and ESL
- High ripple current capability
- No capacitance shift with voltage
- Negligible capacitance shift with respect to temperature
- No piezoelectric noise
- Lead (Pb)-Free, RoHS and REACH compliant

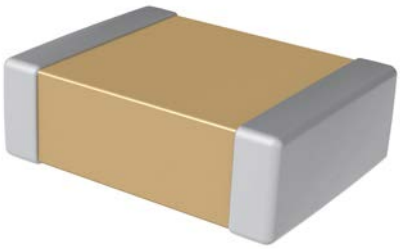

## Applications

- High frequency power converters
- Wide bandgap (WBG), silicon carbide (SiC) and gallium nitride (GaN) systems
- Snubber (high dV/dT)
- Resonant circuits (LLC, Wireless Charging, etc)
- Timing
- Filtering


© KEMET Electronics Corporation • One East Broward Boulevard
Fort Lauderdale, FL 33301 USA • 954-766-2800 • www.kemet.com

## Ordering Information

| C | 1210 | C | 332 | J | C | G | A | C | AUTO |
|---|---|---|---|---|---|---|---|---|---|
| Ceramic | Case Size (L" x W") | Specification/ Series | Capacitance Code (pF) | Capacitance Tolerance[1] | Rated Voltage (VDC) | Dielectric | Failure Rate/ Design | Termination Finish[2] | Packaging/Grade (C-Spec) |
| | 0402<br>0603<br>0805<br>1206<br>1210<br>1808<br>1812<br>1825<br>2220<br>2225<br>2824<br>3040<br>3640<br>4540 | C = Standard | Two significant digits and number of zeros. | B = ±0.10 pF<br>C = ±0.25 pF<br>D = ±0.5 pF<br>F = ±1%<br>G = ±2%<br>J = ±5%<br>K = ±10%<br>M = ±20% | C = 500<br>B = 630<br>D = 1,000<br>F = 1,500<br>G = 2,000<br>Z = 2,500<br>H = 3,000 | G = C0G | A = N/A | C = 100% Matte Sn | See "Packaging C-Spec Ordering Options Table" |

*[1] Additional capacitance tolerance offerings may be available. Contact KEMET for details.*
*[2] Additional termination finish options may be available. Contact KEMET for details.*

## Packaging C-Spec Ordering Options Table

| Packaging Type[1] | Packaging/Grade Ordering Code (C-Spec)[3] |
|---|---|
| 7" Reel | AUTO |
| 13" Reel/Unmarked | AUTO7411 (EIA 0603 and smaller case sizes)<br>AUTO7210 (EIA 0805 and larger case sizes) |
| 7" Reel/Unmarked/2 mm pitch[2] | 3190 |
| 13" Reel/Unmarked/2 mm pitch[2] | 3191 |

*[1] Reeling tape options (Paper or Plastic) are dependent on capacitor case size (L" x W") and thickness dimension. See "Chip Thickness/Tape & Reel Packaging Quantities" and "Tape & Reel Packaging Information".*
*[2] The 2 mm pitch option allows for double the packaging quantity of capacitors on a given reel size. This option is limited to EIA 0603 (1608 metric) case size devices. For more information regarding 2 mm pitch option see "Tape & Reel Packaging Information".*
*[3] All Automotive packaging C-Specs listed exclude the option to laser mark components. Please contact KEMET if you require a laser marked option. For more information see "Capacitor Marking".*
*[3] For additional Information regarding "AUTO" C-Spec options, see "Automotive C-Spec Information."*

## Automotive C-Spec Information

KEMET automotive grade products meet or exceed the requirements outlined by the Automotive Electronics Council. Details regarding test methods and conditions are referenced in document AEC–Q200, Stress Test Qualification for Passive Components. These products are supported by a Product Change Notification (PCN) and Production Part Approval Process warrant (PPAP).

Automotive products offered through our distribution channel have been assigned an inclusive ordering code C-Spec, "AUTO." This C-Spec was developed in order to better serve small and medium-sized companies that prefer an automotive grade component without the requirement to submit a customer Source Controlled Drawing (SCD) or specification for review by a KEMET engineering specialist. This C-Spec is therefore not intended for use by KEMET OEM automotive customers and are not granted the same "privileges" as other automotive C-Specs. Customer PCN approval and PPAP request levels are limited (see details below.)

**Product Change Notification (PCN)**

The KEMET product change notification system is used to communicate primarily the following types of changes:

- Product/process changes that affect product form, fit, function, and/or reliability
- Changes in manufacturing site
- Product obsolescence

| KEMET Automotive C-Spec | Customer Notification Due To: | | Days Prior To Implementation |
|---|---|---|---|
| | Process/Product change | Obsolescence* | |
| KEMET assigned[1] | Yes (with approval and sign off) | Yes | 180 days minimum |
| AUTO | Yes (without approval) | Yes | 90 days minimum |

[1] *KEMET assigned C-Specs require the submittal of a customer SCD or customer specification for review. For additional information contact KEMET.*

**Production Part Approval Process (PPAP)**

The purpose of the Production Part Approval Process is:

- To ensure that supplier can meet the manufacturability and quality requirements for the purchased parts.
- To provide the evidence that all customer engineering design records and specification requirements are properly understood and fulfilled by the manufacturing organization.
- To demonstrate that the established manufacturing process has the potential to produce the part.

| KEMET Automotive C-Spec | PPAP Level | | | | |
|---|---|---|---|---|---|
| | 1 | 2 | 3 | 4 | 5 |
| KEMET assigned[1] | ● | ● | ● | ● | ● |
| AUTO | | | ○ | | |

[1] *KEMET assigned C-Specs require the submittal of a customer SCD or customer specification for review. For additional information contact KEMET.*

● Part number specific PPAP available with customer information included.
○ Product family PPAP only

## Dimensions – Millimeters (Inches)

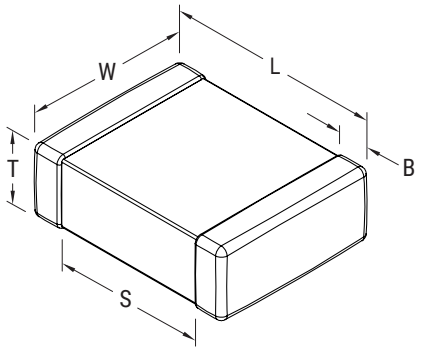


| EIA Size Code | Metric Size Code | L Length | W Width | T Thickness | B Bandwidth | S Separation Minimum | Mounting Technique |
|---|---|---|---|---|---|---|---|
| 0402 | 1005 | 1.00 (0.040) ±0.05 (0.002) | 0.50 (0.020) ±0.05 (0.002) | See Table 2 for Thickness | 0.30 (0.012) ±0.10 (0.004) | 0.30 (0.012) | Solder Reflow Only |
| 0603 | 1608 | 1.60 (0.063) ±0.15 (0.006) | 0.80 (0.032) ±0.15 (0.006) | | 0.35 (0.014) ±0.15 (0.006) | 0.70 (0.028) | Solder Wave or Solder Reflow |
| 0805 | 2012 | 2.00 (0.079) ±0.20 (0.008) | 1.25 (0.049) ±0.20 (0.008) | | 0.50 (0.02) ±0.25 (0.010) | 0.75 (0.030) | |
| 1206 | 3216 | 3.20 (0.126) ±0.20 (0.008) | 1.60 (0.063) ±0.20 (0.008) | | 0.50 (0.02) ±0.25 (0.010) | N/A | |
| 1210 | 3225 | 3.20 (0.126) ±0.20 (0.008) | 2.50 (0.098) ±0.20 (0.008) | | 0.50 (0.02) ±0.25 (0.010) | | Solder Reflow Only |
| 1808 | 4520 | 4.70 (0.185) ±0.50 (0.020) | 2.00 (0.079) ±0.20 (0.008) | | 0.60 (0.024) ±0.35 (0.014) | | |
| 1812 | 4532 | 4.50 (0.177) ±0.30 (0.012) | 3.20 (0.126) ±0.30 (0.012) | | 0.60 (0.024) ±0.35 (0.014) | | |
| 1825 | 4564 | 4.50 (0.177) ±0.30 (.012) | 6.40 (0.252) ±0.40 (0.016) | | 0.60 (0.024) ±0.35 (0.014) | | |
| 2220 | 5650 | 5.70 (0.224) ±0.40 (0.016) | 5.00 (0.197) ±0.40 (0.016) | | 0.60 (0.024) ±0.35 (0.014) | | |
| 2225 | 5664 | 5.60 (0.220) ±0.40 (0.016) | 6.40 (0.248) ±0.40 (0.016) | | 0.60 (0.024) ±0.35 (0.014) | | |
| 2824 | 7260 | 7.10 (0.280) ±0.40 (0.016) | 6.10 (0.240) ±0.40 (0.016) | | 1.27 (0.050) ±0.40 (0.016) | | |
| 3040 | 7610 | 7.60 (0.300) ±0.40 (0.016) | 10.20 (0.402) ±0.40 (0.016) | | 1.27 (0.050) ±0.40 (0.016) | | |
| 3640 | 9210 | 9.10 (0.358) ±0.40 (0.016) | 10.20 (0.402) ±0.40 (0.016) | | 1.27 (0.050) ±0.40 (0.016) | | |
| 4540 | - | 11.40 (0.449) ±0.40 (0.016) | 10.20 (0.402) ±0.40 (0.016) | | 1.27 (0.050) ±0.40 (0.016) | | |

## Qualification/Certification

Automotive Grade products meet or exceed the requirements outlined by the Automotive Electronics Council. Details regarding test methods and conditions are referenced in document AEC–Q200, Stress Test Qualification for Passive Components. For additional information regarding the Automotive Electronics Council and AEC–Q200, please visit their website at www.aecouncil.com.

## Environmental Compliance

Lead (Pb)-free, RoHS, and REACH compliant without exemptions.

## Electrical Parameters/Characteristics

| Item | Parameters/Characteristics |
|---|---|
| Operating Temperature Range | −55°C to +125°C |
| Capacitance Change with Reference to +25°C and 0 VDC Applied (TCC) | ±30 ppm/°C |
| Aging Rate (Maximum % Capacitance Loss/Decade Hour) | 0% |
| [1]Dielectric Withstanding Voltage (DWV) | See Dielectric Withstanding Voltage (DWV) Table (5 ±1 seconds and charge/discharge not exceeding 50 mA) |
| [2]Dissipation Factor (DF) Maximum Limit at 25°C | 0.1% |
| [3]Insulation Resistance (IR) Limit at 25°C | 1,000 megohm microfarads or 100 GΩ (500 VDC applied for 120 ±5 seconds at 25°C) |

*[1] DWV is the voltage a capacitor can withstand (survive) for a short period of time. It exceeds the nominal and continuous working voltage of the capacitor.*

*[2] Capacitance and dissipation factor (DF) measured under the following conditions:*

*1 MHz ±100 kHz and 1.0 $V_{rms}$ ±0.2 V if capacitance ≤ 1,000 pF*

*1 kHz ±50 Hz and 1.0 $V_{rms}$ ±0.2 V if capacitance > 1,000 pF*

*[3] To obtain IR limit, divide MΩ-µF value by the capacitance and compare to GΩ limit. Select the lower of the two limits.*

*Note: When measuring capacitance it is important to ensure the set voltage level is held constant. The HP4284 and Agilent E4980 have a feature known as Automatic Level Control (ALC). The ALC feature should be switched to "ON."*

## Dielectric Withstanding Voltage (DWV)

| EIA Case Size | 500V | 630V | ≥ 1000V |
|---|---|---|---|
| 0402 | 120% of rated voltage | N/A | N/A |
| 0603 | 150% of rated voltage | 130% of rated voltage | 120% of rated voltage |
| 0805 | | < 620pF 150% of rated voltage<br>≥ 620pF 130% of rated voltage | |
| 1206 | | < 5.1nF 150% of rated voltage<br>≥ 5.1nF 130% of rated voltage | |
| 1210 | | < 7.5nF 150% of rated voltage<br>≥ 7.5nF 130% of rated voltage | |
| 1808 | | < 5.1nF 150% of rated voltage<br>≥ 5.1nF 130% of rated voltage | |
| 1812 | | < 12nF 150% of rated voltage<br>≥ 12nF 130% of rated voltage | |
| 1825 | | < 22nF 150% of rated voltage<br>≥ 22nF 130% of rated voltage | |
| 2220 | | < 27nF 150% of rated voltage<br>≥ 27nF 130% of rated voltage | |
| ±2225 | | < 33nF 150% of rated voltage<br>≥ 33nF 130% of rated voltage | |

## Post Environmental Limits

| High Temperature Life, Biased Humidity, Moisture Resistance | | | | | |
|---|---|---|---|---|---|
| Dielectric | Rated DC Voltage | Capacitance Value | Dissipation Factor (Maximum %) | Capacitance Shift | Insulation Resistance |
| C0G | All | All | 0.5 | 0.3% or ±0.25 pF | 10% of Initial Limit |

# Table 1A – Capacitance Range/Selection Waterfall (0603 – 1808 Case Sizes)

| Capacitance | Cap Code | Case Size/Series | C0402C | C0603C | | | C0805C | | | C1206C | | | | | C1210C | | | | | C1808C | | | | | | |
|---|---|---|---|---|---|---|---|---|---|---|---|---|---|---|---|---|---|---|---|---|---|---|---|---|---|---|
| | | Voltage Code | C | C | B | D | C | B | D | C | B | D | F | G | C | B | D | F | G | C | B | D | F | G | Z | H |
| | | Rated Voltage (VDC) | 500 | 500 | 630 | 1000 | 500 | 630 | 1000 | 500 | 630 | 1000 | 1500 | 2000 | 500 | 630 | 1000 | 1500 | 2000 | 500 | 630 | 1000 | 1500 | 2000 | 2500 | 3000 |
| | | Capacitance Tolerance | Product Availability and Chip Thickness Codes See Table 2 for Chip Thickness Dimensions | | | | | | | | | | | | | | | | | | | | | | | |
| 1.0 - 9.1 pF* | 109 - 919* | B C D | | | | | DG | DG | DG | | | | | | | | | | | LB | LB | LB | LB | LB | LB | LB |
| 10 pF - 47pF* | 100 - 470* | F G J K M | | | | | DG | DG | DG | ED | ED | ED | ED | ED | FM | FM | FM | FM | FM | LB | LB | LB | LB | LB | LB | LB |
| 51 pF | 510 | F G J K M | | | | | DG | DG | DG | ED | ED | ED | ED | ED | FM | FM | FM | FM | FM | LB | LB | LB | LB | LB | LB | LB |
| 56 pF | 560 | F G J K M | | | | | DG | DG | DG | ED | ED | ED | ED | ED | FM | FM | FM | FM | FM | LB | LB | LB | LB | LB | LB | LB |
| 62 pF | 620 | F G J K M | | | | | DG | DG | DG | ED | ED | ED | ED | ED | FM | FM | FM | FM | FM | LB | LB | LB | LB | LB | LB | LB |
| 68 pF | 680 | F G J K M | | | | | DG | DG | DG | ED | ED | ED | ED | ED | FM | FM | FM | FM | FM | LB | LB | LB | LB | LB | LB | LB |
| 75 pF | 750 | F G J K M | | | | | DG | DG | DG | ED | ED | ED | ED | EF | FM | FM | FM | FM | FM | LB | LB | LB | LB | LB | LB | LB |
| 82 pF | 820 | F G J K M | | | | | DG | DG | DG | ED | ED | ED | ED | EF | FM | FM | FM | FM | FM | LB | LB | LB | LB | LB | LB | LB |
| 91 pF | 910 | F G J K M | | | | | DG | DG | DG | ED | ED | ED | ED | EF | FM | FM | FM | FM | FM | LB | LB | LB | LB | LB | LB | LB |
| 100 pF | 101 | F G J K M | BB | CG | CG | CG | DG | DG | DG | ED | ED | ED | ED | EF | FM | FM | FM | FM | FM | LB | LB | LB | LB | LB | LC | LB |
| 110 pF | 111 | F G J K M | BB | CG | CG | CG | DG | DG | DG | ED | ED | ED | ED | EG | FM | FM | FM | FM | FM | LB | LB | LB | LB | LB | LC | LB |
| 120 pF | 121 | F G J K M | BB | CG | CG | CG | DG | DG | DG | ED | ED | ED | ED | EG | FG | FG | FG | FM | FM | LA | LA | LA | LA | LB | LC | LB |
| 130 pF | 131 | F G J K M | BB | CG | CG | CG | DG | DG | DG | ED | ED | ED | ED | EG | FG | FG | FG | FM | FM | LA | LA | LA | LA | LB | LC | LC |
| 150 pF | 151 | F G J K M | BB | CG | CG | CG | DG | DG | DG | ED | ED | ED | EF | EG | FG | FG | FG | FM | FM | LA | LA | LA | LA | LB | LC | LC |
| 160 pF | 161 | F G J K M | BB | CG | CG | CG | DG | DG | DG | ED | ED | ED | EF | EG | FG | FG | FG | FM | FM | LA | LA | LA | LA | LC | LC | LC |
| 180 pF | 181 | F G J K M | BB | CG | CG | CG | DG | DG | DG | ED | ED | ED | EF | EG | FG | FG | FG | FM | FM | LA | LA | LA | LA | LC | LC | LC |
| 200 pF | 201 | F G J K M | BB | CG | CG | CG | DG | DG | DG | ED | ED | ED | EF | EG | FG | FG | FG | FM | FM | LA | LA | LA | LA | LC | LC | |
| 220 pF | 221 | F G J K M | BB | CG | CG | CG | DG | DG | DG | ED | ED | ED | EG | EG | FG | FG | FG | FM | FM | LA | LA | LA | LA | LC | LC | |
| 240 pF | 241 | F G J K M | BB | CG | CG | | DG | DG | DG | ED | ED | ED | EG | EG | FG | FG | FG | FM | FM | LA | LA | LA | LB | LC | LC | |
| 270 pF | 271 | F G J K M | BB | CG | CG | | DG | DG | DG | ED | ED | ED | EG | EG | FG | FG | FG | FK | FK | LA | LA | LA | LB | LC | LC | |
| 300 pF | 301 | F G J K M | BD | CG | CG | | DG | DG | DN | ED | ED | EF | EG | | FG | FG | FG | FK | FK | LA | LA | LA | LB | LC | LC | |
| 330 pF | 331 | F G J K M | BD | CG | CG | | DG | DG | DN | ED | ED | EF | EG | | FG | FG | FG | FK | FK | LA | LA | LA | LB | LC | LC | |
| 360 pF | 361 | F G J K M | | CG | CG | | DG | DG | DN | ED | ED | EF | EG | | FG | FG | FG | FK | FS | LA | LA | LA | LB | LA | LC | |
| 390 pF | 391 | F G J K M | | CG | CG | | DG | DG | DN | ED | ED | EF | EG | | FG | FG | FG | FK | FS | LA | LA | LA | LB | LA | LC | |
| 430 pF | 431 | F G J K M | | CG | CG | | DG | DG | DP | ED | ED | EF | EG | | FG | FM | FM | FS | FS | LA | LB | LB | LC | LA | | |
| 470 pF | 471 | F G J K M | | CG | CG | | DG | DG | DP | ED | ED | EG | EG | | FG | FM | FM | FS | FS | LA | LB | LB | LC | LA | | |
| 510 pF | 511 | F G J K M | | CG | CG | | DG | DG | DP | ED | ED | EG | EG | | FG | FM | FM | FS | FS | LA | LB | LB | LC | LB | | |
| 560 pF | 561 | F G J K M | | CG | CG | | DG | DG | DG | ED | ED | EG | EG | | FG | FM | FM | FS | FS | LA | LB | LB | LC | LB | | |
| 620 pF | 621 | F G J K M | | CG | CG | | DG | DG | DG | ED | ED | EG | | | FG | FM | FM | FS | FS | LA | LB | LB | LA | LC | | |
| 680 pF | 681 | F G J K M | | CG | CG | | DG | DG | DG | ED | ED | EG | | | FG | FM | FM | FS | FS | LB | LB | LB | LA | LC | | |
| 750 pF | 751 | F G J K M | | | | | DG | DG | DG | ED | EF | EG | | | FG | FM | FM | FM | | LB | LB | LB | LA | | | |
| 820 pF | 821 | F G J K M | | | | | DG | DG | DG | ED | EF | EG | | | FG | FM | FM | FM | | LB | LB | LB | LA | | | |
| 910 pF | 911 | F G J K M | | | | | DN | DN | | ED | EF | EG | | | FM | FM | FM | FY | | LB | LB | LB | LA | | | |
| 1,000 pF | 102 | F G J K M | | | | | DN | DN | | ED | EF | EG | | | FM | FM | FM | FY | | LB | LB | LB | LB | | | |
| 1,100 pF | 112 | F G J K M | | | | | DN | DN | | EF | EG | ED | | | FM | FK | FK | FS | | LC | LC | LC | LB | | | |
| 1,200 pF | 122 | F G J K M | | | | | DN | DN | | EF | EG | ED | | | FM | FK | FK | FS | | LC | LC | LC | LC | | | |
| 1,300 pF | 132 | F G J K M | | | | | DN | DN | | EF | EG | ED | | | FM | FS | FS | | | LC | LC | LC | LC | | | |
| 1,500 pF | 152 | F G J K M | | | | | DP | DP | | EF | EG | ED | | | FK | FS | FS | | | LC | LC | LC | LC | | | |
| 1,600 pF | 162 | F G J K M | | | | | DP | DP | | EF | EG | ED | | | FK | FS | FS | | | LC | LC | LC | | | | |
| 1,800 pF | 182 | F G J K M | | | | | DG | DG | | EF | EG | EF | | | FK | FS | FS | | | LC | LC | LC | | | | |
| 2,000 pF | 202 | F G J K M | | | | | DG | DG | | EG | EB | EF | | | FK | FL | FS | | | LC | LA | LB | | | | |
| 2,200 pF | 222 | F G J K M | | | | | DG | DG | | EG | EB | EF | | | FK | FL | FS | | | LC | LA | LB | | | | |
| 2,400 pF | 242 | F G J K M | | | | | DG | DG | | EG | EB | EG | | | FS | FL | FS | | | LC | LA | LB | | | | |
| 2,700 pF | 272 | F G J K M | | | | | DG | DG | | EG | EB | EG | | | FS | FL | FS | | | LC | LA | LC | | | | |
| 3,000 pF | 302 | F G J K M | | | | | | | | EB | EB | | | | FS | FL | FF | | | LA | LA | LA | | | | |
| 3,300 pF | 332 | F G J K M | | | | | | | | EB | EB | | | | FS | FM | FG | | | LA | LA | LA | | | | |
| 3,600 pF | 362 | F G J K M | | | | | | | | EC | EC | | | | FL | FM | FG | | | LA | LB | LA | | | | |
| 3,900 pF | 392 | F G J K M | | | | | | | | EC | EC | | | | FL | FY | FL | | | LA | LB | LA | | | | |
| 4,300 pF | 432 | F G J K M | | | | | | | | ED | ED | | | | FM | FY | FL | | | LA | LC | LA | | | | |
| 4,700 pF | 472 | F G J K M | | | | | | | | ED | ED | | | | FM | FY | FM | | | LA | LC | LB | | | | |
| 5,100 pF | 512 | F G J K M | | | | | | | | EE | EE | | | | FY | FS | FM | | | LA | LB | LB | | | | |
| 5,600 pF | 562 | F G J K M | | | | | | | | EF | EF | | | | FY | FS | FM | | | LB | LC | LC | | | | |
| Capacitance | Cap Code | Rated Voltage (VDC) | 500 | 500 | 630 | 1000 | 500 | 630 | 1000 | 500 | 630 | 1000 | 1500 | 2000 | 500 | 630 | 1000 | 1500 | 2000 | 500 | 630 | 1000 | 1500 | 2000 | 2500 | 3000 |
| | | Voltage Code | C | C | B | D | C | B | D | C | B | D | F | G | C | B | D | F | G | C | B | D | F | G | Z | H |
| | | Case Size/Series | C0402C | C0603C | | | C0805C | | | C1206C | | | | | C1210C | | | | | C1808C | | | | | | |

**Capacitance range Includes E24 decade values only (i.e., 10, 11, 12, 13, 15, 16, 18, 20, 22, 24, 27, 30, 33, 36, 39, 43, 47, 51, 56, 62, 68, 75, 82, and 91.)*
*KEMET reserves the right to substitute product with an improved temperature characteristic, tighter capacitance tolerance and/or higher voltage capability within the same form factor (configuration and dimensions.)*
*These products are protected under US Patents 7,172,985 and 7,670,981, other patents pending, and any foreign counterparts.*

## Table 1A – Capacitance Range/Selection Waterfall (0603 – 1808 Case Sizes) cont.

| Capacitance | Cap Code | Case Size/Series | C0402C | C0603C | | | C0805C | | | C1206C | | | | | C1210C | | | | | C1808C | | | | | | |
|---|---|---|---|---|---|---|---|---|---|---|---|---|---|---|---|---|---|---|---|---|---|---|---|---|---|---|
| | | Voltage Code | C | C | B | D | C | B | D | C | B | D | F | G | C | B | D | F | G | C | B | D | F | G | Z | H |
| | | Rated Voltage (VDC) | 500 | 500 | 630 | 1000 | 500 | 630 | 1000 | 500 | 630 | 1000 | 1500 | 2000 | 500 | 630 | 1000 | 1500 | 2000 | 500 | 630 | 1000 | 1500 | 2000 | 2500 | 3000 |
| | | Capacitance Tolerance | Product Availability and Chip Thickness Codes See Table 2 for Chip Thickness Dimensions | | | | | | | | | | | | | | | | | | | | | | | |
| 6,200pF | 622 | F G J K M | | | | | | | | EF | EF | | | | FY | FE | FY | | | LC | LC | LC | | | | |
| 6,800pF | 682 | F G J K M | | | | | | | | EG | EG | | | | FY | FE | FY | | | LC | LC | LC | | | | |
| 7,500pF | 752 | F G J K M | | | | | | | | EG | EG | | | | FS | FF | FS | | | LA | LA | | | | | |
| 8,200 pF | 822 | F G J K M | | | | | | | | EG | EG | | | | FS | FF | FS | | | LA | LA | | | | | |
| 9,100 pF | 912 | F G J K M | | | | | | | | EG | EG | | | | FF | FF | FS | | | LA | LA | | | | | |
| 10,000 pF | 103 | F G J K M | | | | | | | | EH | EH | | | | FG | FG | FS | | | LA | LA | | | | | |
| 12,000 pF | 123 | F G J K M | | | | | | | | EG | | | | | FG | FG | FM | | | LA | LA | | | | | |
| 15,000 pF | 153 | F G J K M | | | | | | | | EG | | | | | FM | FM | FS | | | LB | LB | | | | | |
| 18,000 pF | 183 | F G J K M | | | | | | | | | | | | | FM | FM | FS | | | LC | LC | | | | | |
| 22,000 pF | 223 | F G J K M | | | | | | | | | | | | | FY | FY | FS | | | | | | | | | |
| 27,000 pF | 273 | F G J K M | | | | | | | | | | | | | FS | FS | | | | | | | | | | |
| 33,000 pF | 333 | F G J K M | | | | | | | | | | | | | FS | FS | | | | | | | | | | |
| Capacitance | Cap Code | Rated Voltage (VDC) | 500 | 500 | 630 | 1000 | 500 | 630 | 1000 | 500 | 630 | 1000 | 1500 | 2000 | 500 | 630 | 1000 | 1500 | 2000 | 500 | 630 | 1000 | 1500 | 2000 | 2500 | 3000 |
| | | Voltage Code | C | C | B | D | C | B | D | C | B | D | F | G | C | B | D | F | G | C | B | D | F | G | Z | H |
| | | Case Size/Series | C0402C | C0603C | | | C0805C | | | C1206C | | | | | C1210C | | | | | C1808C | | | | | | |

**Capacitance range Includes E24 decade values only (i.e., 10, 11, 12, 13, 15, 16, 18, 20, 22, 24, 27, 30, 33, 36, 39, 43, 47, 51, 56, 62, 68, 75, 82, and 91.)*
*KEMET reserves the right to substitute product with an improved temperature characteristic, tighter capacitance tolerance and/or higher voltage capability within the same form factor (configuration and dimensions.)*
*These products are protected under US Patents 7,172,985 and 7,670,981, other patents pending, and any foreign counterparts.*

## Table 1B – Capacitance Range/Selection Waterfall (1812 – 2225 Case Sizes)

| Capacitance | Cap Code | Case Size/Series | C1812C | | | | | | | C1825C | | | | | | | C2220C | | | | | | | C2225C | | | | | | |
|---|---|---|---|---|---|---|---|---|---|---|---|---|---|---|---|---|---|---|---|---|---|---|---|---|---|---|---|---|---|---|
| | | Voltage Code | C | B | D | F | G | Z | H | C | B | D | F | G | Z | H | C | B | D | F | G | Z | H | C | B | D | F | G | Z | H |
| | | Rated Voltage (VDC) | 500 | 630 | 1000 | 1500 | 2000 | 2500 | 3000 | 500 | 630 | 1000 | 1500 | 2000 | 2500 | 3000 | 500 | 630 | 1000 | 1500 | 2000 | 2500 | 3000 | 500 | 630 | 1000 | 1500 | 2000 | 2500 | 3000 |
| | | Capacitance Tolerance | Product Availability and Chip Thickness Codes See Table 2 for Chip Thickness Dimensions | | | | | | | | | | | | | | | | | | | | | | | | | | | |
| 10 pF - 47pF* | 100 - 470* | F G J K M | GB | GB | GB | GB | GB | GB | GB | HG | HG | HG | HG | HG | HG | HG | JK | JK | JK | JK | JK | JK | JK | KF | KF | KF | KF | KF | KF | KF |
| 51 pF | 510 | F G J K M | GB | GB | GB | GB | GB | GB | GB | HG | HG | HG | HG | HG | HG | HG | JK | JK | JK | JK | JK | JK | JK | KF | KF | KF | KF | KF | KF | KF |
| 56 pF | 560 | F G J K M | GB | GB | GB | GB | GB | GB | GB | HG | HG | HG | HG | HG | HG | HG | JK | JK | JK | JK | JK | JK | JK | KF | KF | KF | KF | KF | KF | KF |
| 62 pF | 620 | F G J K M | GB | GB | GB | GB | GB | GB | GB | HG | HG | HG | HG | HG | HG | HG | JK | JK | JK | JK | JK | JK | JK | KF | KF | KF | KF | KF | KF | KF |
| 68 pF | 680 | F G J K M | GB | GB | GB | GB | GB | GB | GB | HG | HG | HG | HG | HG | HG | HG | JK | JK | JK | JK | JK | JK | JK | KF | KF | KF | KF | KF | KF | KF |
| 75 pF | 750 | F G J K M | GB | GB | GB | GB | GB | GB | GB | HG | HG | HG | HG | HG | HG | HG | JK | JK | JK | JK | JK | JK | JK | KF | KF | KF | KF | KF | KF | KF |
| 82 pF | 820 | F G J K M | GB | GB | GB | GB | GB | GB | GB | HG | HG | HG | HG | HG | HG | HG | JK | JK | JK | JK | JK | JK | JK | KF | KF | KF | KF | KF | KF | KF |
| 91 pF | 910 | F G J K M | GD | GD | GD | GD | GD | GD | GD | HG | HG | HG | HG | HG | HG | HG | JK | JK | JK | JK | JK | JK | JK | KF | KF | KF | KF | KF | KF | KF |
| 100 pF | 101 | F G J K M | GD | GD | GD | GD | GD | GD | GD | HG | HG | HG | HG | HG | HG | HG | JK | JK | JK | JK | JK | JK | JK | KF | KF | KF | KF | KF | KF | KF |
| 110 pF | 111 | F G J K M | GD | GD | GD | GD | GD | GD | GD | HG | HG | HG | HG | HG | HG | HG | JK | JK | JK | JK | JK | JK | JK | KF | KF | KF | KF | KF | KF | KF |
| 120 pF | 121 | F G J K M | GD | GD | GD | GD | GD | GD | GD | HG | HG | HG | HG | HG | HG | HG | JK | JK | JK | JK | JK | JK | JK | KF | KF | KF | KF | KF | KF | KF |
| 130 pF | 131 | F G J K M | GD | GD | GD | GD | GD | GD | GD | HG | HG | HG | HG | HG | HG | HG | JK | JK | JK | JK | JK | JK | JK | KF | KF | KF | KF | KF | KF | KF |
| 150 pF | 151 | F G J K M | GD | GD | GD | GD | GD | GD | GK | HG | HG | HG | HG | HG | HG | HG | JK | JK | JK | JK | JK | JK | JK | KF | KF | KF | KF | KF | KF | KF |
| 160 pF | 161 | F G J K M | GD | GD | GD | GD | GD | GD | GK | HG | HG | HG | HG | HG | HG | HG | JK | JK | JK | JK | JK | JK | JK | KF | KF | KF | KF | KF | KF | KF |
| 180 pF | 181 | F G J K M | GD | GD | GD | GD | GD | GD | GK | HG | HG | HG | HG | HG | HG | HG | JK | JK | JK | JK | JK | JK | JK | KF | KF | KF | KF | KF | KF | KF |
| 200 pF | 201 | F G J K M | GD | GD | GD | GD | GD | GD | GM | HE | HE | HE | HE | HE | HE | HG | JK | JK | JK | JK | JK | JK | JK | KF | KF | KF | KF | KF | KF | KF |
| Capacitance | Cap Code | Rated Voltage (VDC) | 500 | 630 | 1000 | 1500 | 2000 | 2500 | 3000 | 500 | 630 | 1000 | 1500 | 2000 | 2500 | 3000 | 500 | 630 | 1000 | 1500 | 2000 | 2500 | 3000 | 500 | 630 | 1000 | 1500 | 2000 | 2500 | 3000 |
| | | Voltage Code | C | B | D | F | G | Z | H | C | B | D | F | G | Z | H | C | B | D | F | G | Z | H | C | B | D | F | G | Z | H |
| | | Case Size/Series | C1812C | | | | | | | C1825C | | | | | | | C2220C | | | | | | | C2225C | | | | | | |

**Capacitance range Includes E24 decade values only (i.e., 10, 11, 12, 13, 15, 16, 18, 20, 22, 24, 27, 30, 33, 36, 39, 43, 47, 51, 56, 62, 68, 75, 82, and 91.)*
*KEMET reserves the right to substitute product with an improved temperature characteristic, tighter capacitance tolerance and/or higher voltage capability within the same form factor (configuration and dimensions.)*
*These products are protected under US Patents 7,172,985 and 7,670,981, other patents pending, and any foreign counterparts.*

## Table 1B – Capacitance Range/Selection Waterfall (1812 – 2225 Case Sizes) cont.

| Capacitance | Cap Code | Case Size/ Series | | | | | | | C1812C | | | | | | | C1825C | | | | | | | C2220C | | | | | | | C2225C | | | | | | |
|---|---|---|---|---|---|---|---|---|---|---|---|---|---|---|---|---|---|---|---|---|---|---|---|---|---|---|---|---|---|---|---|---|---|---|---|---|
| | | Voltage Code | | | | | | | C | B | D | F | G | Z | H | C | B | D | F | G | Z | H | C | B | D | F | G | Z | H | C | B | D | F | G | Z | H |
| | | Rated Voltage (VDC) | | | | | | | 500 | 630 | 1000 | 1500 | 2000 | 2500 | 3000 | 500 | 630 | 1000 | 1500 | 2000 | 2500 | 3000 | 500 | 630 | 1000 | 1500 | 2000 | 2500 | 3000 | 500 | 630 | 1000 | 1500 | 2000 | 2500 | 3000 |
| | | Capacitance Tolerance | | | | | | | Product Availability and Chip Thickness Codes See Table 2 for Chip Thickness Dimensions | | | | | | | | | | | | | | | | | | | | | | | | | | | |
| 220 pF | 221 | | | | F | G | J | K | M | GB | GB | GB | GB | GB | GD | GM | HE | HE | HE | HE | HE | HE | HG | JK | JK | JK | JK | JK | JK | JK | KF | KF | KF | KF | KF | KF | KF |
| 240 pF | 241 | | | | F | G | J | K | M | GB | GB | GB | GB | GB | GD | GM | HE | HE | HE | HE | HE | HE | HG | JK | JK | JK | JK | JK | JK | JK | KE | KE | KE | KE | KE | KE | KF |
| 270 pF | 271 | | | | F | G | J | K | M | GB | GB | GB | GB | GB | GH | GM | HE | HE | HE | HE | HE | HE | HG | JK | JK | JK | JK | JK | JK | JK | KE | KE | KE | KE | KE | KE | KF |
| 300 pF | 301 | | | | F | G | J | K | M | GB | GB | GB | GB | GB | GH | GM | HE | HE | HE | HE | HE | HE | HG | JK | JK | JK | JK | JK | JK | JK | KE | KE | KE | KE | KE | KE | KF |
| 330 pF | 331 | | | | F | G | J | K | M | GB | GB | GB | GB | GB | GH | GO | HE | HE | HE | HE | HE | HE | HG | JE | JE | JE | JE | JE | JK | JK | KE | KE | KE | KE | KE | KE | KF |
| 360 pF | 361 | | | | F | G | J | K | M | GB | GB | GB | GB | GD | GK | GO | HE | HE | HE | HE | HE | HE | HG | JE | JE | JE | JE | JE | JK | JK | KE | KE | KE | KE | KE | KE | KF |
| 390 pF | 391 | | | | F | G | J | K | M | GB | GB | GB | GB | GD | GK | GO | HE | HE | HE | HE | HE | HE | HG | JE | JE | JE | JE | JE | JK | JE | KE | KE | KE | KE | KE | KE | KF |
| 430 pF | 431 | | | | F | G | J | K | M | GB | GB | GB | GB | GD | GK | | HE | HE | HE | HE | HE | HE | HJ | JE | JE | JE | JE | JE | JK | JE | KE | KE | KE | KE | KE | KE | KF |
| 470 pF | 471 | | | | F | G | J | K | M | GB | GB | GB | GB | GD | GK | | HE | HE | HE | HE | HE | HE | HJ | JE | JE | JE | JE | JE | JK | JK | KF | KF | KF | KF | KE | KE | KF |
| 510 pF | 511 | | | | F | G | J | K | M | GB | GB | GB | GD | GH | GM | | HE | HE | HE | HE | HE | HE | HJ | JK | JK | JK | JK | JK | JK | JK | KF | KF | KF | KF | KE | KE | KF |
| 560 pF | 561 | | | | F | G | J | K | M | GB | GB | GB | GD | GH | GM | | HE | HE | HE | HE | HG | HE | HJ | JK | JK | JK | JK | JK | JK | JL | KF | KF | KF | KF | KE | KE | KF |
| 620 pF | 621 | | | | F | G | J | K | M | GB | GB | GB | GD | GH | GM | | HE | HE | HE | HE | HG | HE | HK | JK | JK | JK | JK | JK | JK | JL | KF | KF | KF | KF | KE | KF | KH |
| 680 pF | 681 | | | | F | G | J | K | M | GB | GB | GB | GD | GH | GO | | HE | HE | HE | HE | HG | HG | HK | JE | JE | JE | JK | JK | JK | JL | KF | KF | KF | KF | KE | KF | KH |
| 750 pF | 751 | | | | F | G | J | K | M | GB | GB | GB | GD | GK | | | HE | HE | HE | HG | HG | HG | | JE | JE | JE | JK | JK | JK | JL | KE | KE | KE | KF | KE | KF | KH |
| 820 pF | 821 | | | | F | G | J | K | M | GB | GB | GB | GD | GK | | | HE | HE | HE | HG | HG | HG | | JE | JE | JE | JK | JK | JK | JN | KE | KE | KE | KF | KE | KF | KJ |
| 910 pF | 911 | | | | F | G | J | K | M | GB | GB | GB | GH | GM | | | HE | HE | HE | HG | HG | HG | | JE | JK | JK | JK | JK | JK | JN | KE | KE | KE | KF | KE | KF | KJ |
| 1,000 pF | 102 | | | | F | G | J | K | M | GB | GB | GB | GH | GM | | | HE | HE | HE | HG | HG | HG | | JE | JK | JK | JK | JK | JK | JN | KE | KE | KE | KF | KE | KF | KJ |
| 1,100 pF | 112 | | | | F | G | J | K | M | GB | GB | GB | GH | GO | | | HE | HE | HE | HG | HG | HJ | | JE | JK | JK | JK | JK | JK | | KE | KE | KE | KF | KF | KF | |
| 1,200 pF | 122 | | | | F | G | J | K | M | GB | GB | GB | GH | GO | | | HE | HE | HE | HG | HG | HJ | | JE | JK | JK | JK | JK | JL | | KE | KE | KE | KF | KF | KF | |
| 1,300 pF | 132 | | | | F | G | J | K | M | GB | GB | GB | GH | GO | | | HE | HE | HE | HG | HE | HJ | | JE | JK | JK | JK | JE | JL | | KE | KE | KE | KF | KF | KH | |
| 1,500 pF | 152 | | | | F | G | J | K | M | GB | GB | GB | GK | GO | | | HE | HE | HE | HG | HE | HK | | JE | JK | JK | JK | JE | JL | | KE | KE | KE | KF | KF | KH | |
| 1,600 pF | 162 | | | | F | G | J | K | M | GB | GD | GD | GK | | | | HE | HG | HG | HG | HG | HK | | JE | JK | JK | JK | JE | JL | | KE | KE | KE | KF | KE | KH | |
| 1,800 pF | 182 | | | | F | G | J | K | M | GB | GD | GD | GM | | | | HE | HG | HG | HG | HG | | | JE | JK | JK | JK | JE | JN | | KE | KE | KE | KF | KE | KH | |
| 2,000 pF | 202 | | | | F | G | J | K | M | GB | GH | GH | GM | | | | HE | HG | HG | HE | HJ | | | JE | JK | JK | JE | JK | | | KE | KE | KE | KF | KE | KJ | |
| 2,200 pF | 222 | | | | F | G | J | K | M | GB | GH | GH | GO | | | | HE | HG | HG | HE | HJ | | | JE | JK | JK | JE | JK | | | KE | KE | KE | KF | KF | KJ | |
| 2,400 pF | 242 | | | | F | G | J | K | M | GB | GH | GK | GO | | | | HE | HG | HG | HE | HJ | | | JK | JK | JK | JE | JL | | | KE | KE | KE | KE | KH | | |
| 2,700 pF | 272 | | | | F | G | J | K | M | GB | GH | GK | GO | | | | HE | HG | HG | HE | HK | | | JK | JK | JK | JE | JL | | | KE | KE | KE | KE | KH | | |
| 3,000 pF | 302 | | | | F | G | J | K | M | GB | GH | GK | | | | | HG | HG | HG | HE | HK | | | JK | JK | JK | JE | JL | | | KE | KE | KE | KE | KH | | |
| 3,300 pF | 332 | | | | F | G | J | K | M | GB | GH | GK | | | | | HG | HG | HG | HG | | | | JK | JK | JK | JK | JN | | | KE | KE | KE | KE | KJ | | |
| 3,600 pF | 362 | | | | F | G | J | K | M | GB | GH | GM | | | | | HG | HG | HG | HG | | | | JK | JK | JK | JK | JN | | | KE | KF | KF | KF | KJ | | |
| 3,900 pF | 392 | | | | F | G | J | K | M | GB | GH | GM | | | | | HG | HG | HG | HJ | | | | JK | JK | JK | JK | JN | | | KE | KF | KF | KF | KJ | | |
| 4,300 pF | 432 | | | | F | G | J | K | M | GH | GH | GO | | | | | HG | HG | HG | HJ | | | | JK | JK | JK | JK | | | | KE | KF | KF | KF | | | |
| 4,700 pF | 472 | | | | F | G | J | K | M | GH | GH | GO | | | | | HG | HG | HG | HJ | | | | JK | JK | JK | JL | | | | KE | KF | KF | KH | | | |
| 5,100 pF | 512 | | | | F | G | J | K | M | GH | GK | GO | | | | | HG | HE | HG | HK | | | | JK | JK | JK | JL | | | | KE | KF | KF | KH | | | |
| 5,600 pF | 562 | | | | F | G | J | K | M | GH | GK | GO | | | | | HG | HE | HG | HK | | | | JK | JK | JK | JN | | | | KE | KF | KF | KH | | | |
| 6,200pF | 622 | | | | F | G | J | K | M | GH | GK | GH | | | | | HG | HE | HG | | | | | JK | JE | JE | JN | | | | KE | KF | KF | KJ | | | |
| 6,800pF | 682 | | | | F | G | J | K | M | GH | GM | GH | | | | | HG | HE | HJ | | | | | JK | JE | JK | JN | | | | KE | KF | KF | KJ | | | |
| 7,500pF | 752 | | | | F | G | J | K | M | GH | GM | GK | | | | | HG | HE | HJ | | | | | JK | JE | JK | | | | | KF | KE | KF | | | | |
| 8,200 pF | 822 | | | | F | G | J | K | M | GK | GO | GK | | | | | HG | HE | HJ | | | | | JK | JE | JL | | | | | KF | KE | KF | | | | |
| 9,100 pF | 912 | | | | F | G | J | K | M | GM | GO | GM | | | | | HE | HG | HK | | | | | JE | JE | JL | | | | | KF | KE | KH | | | | |
| 10,000 pF | 103 | | | | F | G | J | K | M | GM | GO | GM | | | | | HE | HG | HK | | | | | JE | JE | JL | | | | | KF | KE | KH | | | | |
| 12,000 pF | 123 | | | | F | G | J | K | M | GO | GH | GO | | | | | HE | HG | HE | | | | | JE | JK | JN | | | | | KE | KE | KH | | | | |
| 15,000 pF | 153 | | | | F | G | J | K | M | GO | GH | GO | | | | | HE | HJ | HE | | | | | JE | JL | JE | | | | | KE | KF | KJ | | | | |
| 18,000 pF | 183 | | | | F | G | J | K | M | GH | GH | | | | | | HG | HK | HG | | | | | JE | JL | JE | | | | | KE | KH | KE | | | | |
| 22,000 pF | 223 | | | | F | G | J | K | M | GH | GH | | | | | | HJ | HE | HJ | | | | | JK | JN | JK | | | | | KF | KJ | KF | | | | |
| 27,000 pF | 273 | | | | F | G | J | K | M | GK | GK | | | | | | HJ | HE | HK | | | | | JL | JN | JL | | | | | KF | KJ | KH | | | | |
| 33,000 pF | 333 | | | | F | G | J | K | M | GM | GM | | | | | | HK | HE | HK | | | | | JN | JE | JN | | | | | KH | KE | KH | | | | |
| 39,000 pF | 393 | | | | F | G | J | K | M | GO | GO | | | | | | HE | HE | | | | | | JE | JE | | | | | | KJ | KE | KJ | | | | |
| 47,000 pF | 473 | | | | F | G | J | K | M | GO | GO | | | | | | HE | HE | | | | | | JE | JE | | | | | | KE | KE | | | | | |
| 56,000 pF | 563 | | | | F | G | J | K | M | | | | | | | | HG | HG | | | | | | JK | JK | | | | | | KE | KE | | | | | |
| Capacitance | Cap Code | Rated Voltage (VDC) | | | | | | | 500 | 630 | 1000 | 1500 | 2000 | 2500 | 3000 | 500 | 630 | 1000 | 1500 | 2000 | 2500 | 3000 | 500 | 630 | 1000 | 1500 | 2000 | 2500 | 3000 | 500 | 630 | 1000 | 1500 | 2000 | 2500 | 3000 |
| | | Voltage Code | | | | | | | C | B | D | F | G | Z | H | C | B | D | F | G | Z | H | C | B | D | F | G | Z | H | C | B | D | F | G | Z | H |
| | | Case Size/Series | | | | | | | C1812C | | | | | | | C1825C | | | | | | | C2220C | | | | | | | C2225C | | | | | | |

**Capacitance range Includes E24 decade values only (i.e., 10, 11, 12, 13, 15, 16, 18, 20, 22, 24, 27, 30, 33, 36, 39, 43, 47, 51, 56, 62, 68, 75, 82, and 91.)*
*KEMET reserves the right to substitute product with an improved temperature characteristic, tighter capacitance tolerance and/or higher voltage capability within the same form factor (configuration and dimensions.)*
*These products are protected under US Patents 7,172,985 and 7,670,981, other patents pending, and any foreign counterparts.*

## Table 1B – Capacitance Range/Selection Waterfall (1812 – 2225 Case Sizes) cont.

| Capacitance | Cap Code | Case Size/ Series | C1812C | | | | | | | C1825C | | | | | | | C2220C | | | | | | | C2225C | | | | | | |
|---|---|---|---|---|---|---|---|---|---|---|---|---|---|---|---|---|---|---|---|---|---|---|---|---|---|---|---|---|---|---|
| | | Voltage Code | C | B | D | F | G | Z | H | C | B | D | F | G | Z | H | C | B | D | F | G | Z | H | C | B | D | F | G | Z | H |
| | | Rated Voltage (VDC) | 500 | 630 | 1000 | 1500 | 2000 | 2500 | 3000 | 500 | 630 | 1000 | 1500 | 2000 | 2500 | 3000 | 500 | 630 | 1000 | 1500 | 2000 | 2500 | 3000 | 500 | 630 | 1000 | 1500 | 2000 | 2500 | 3000 |
| | | Capacitance Tolerance | Product Availability and Chip Thickness Codes See Table 2 for Chip Thickness Dimensions | | | | | | | | | | | | | | | | | | | | | | | | | | | |
| 68,000 pF | 683 | F G J K M | | | | | | | | HJ | HJ | | | | | | JL | JL | | | | | | KF | KF | | | | | |
| 82,000 pF | 823 | F G J K M | | | | | | | | HK | HK | | | | | | JL | JL | | | | | | KH | KH | | | | | |
| 0.1 µF | 104 | F G J K M | | | | | | | | HK | HK | | | | | | JN | JN | | | | | | KH | KH | | | | | |
| 0.12 µF | 124 | F G J K M | | | | | | | | | | | | | | | | | | | | | | KJ | KJ | | | | | |
| Capacitance | Cap Code | Rated Voltage (VDC) | 500 | 630 | 1000 | 1500 | 2000 | 2500 | 3000 | 500 | 630 | 1000 | 1500 | 2000 | 2500 | 3000 | 500 | 630 | 1000 | 1500 | 2000 | 2500 | 3000 | 500 | 630 | 1000 | 1500 | 2000 | 2500 | 3000 |
| | | Voltage Code | C | B | D | F | G | Z | H | C | B | D | F | G | Z | H | C | B | D | F | G | Z | H | C | B | D | F | G | Z | H |
| | | Case Size/Series | C1812C | | | | | | | C1825C | | | | | | | C2220C | | | | | | | C2225C | | | | | | |

**Capacitance range Includes E24 decade values only (i.e., 10, 11, 12, 13, 15, 16, 18, 20, 22, 24, 27, 30, 33, 36, 39, 43, 47, 51, 56, 62, 68, 75, 82, and 91.)*
*KEMET reserves the right to substitute product with an improved temperature characteristic, tighter capacitance tolerance and/or higher voltage capability within the same form factor (configuration and dimensions.)*
*These products are protected under US Patents 7,172,985 and 7,670,981, other patents pending, and any foreign counterparts.*

## Table 1C – Capacitance Range/Selection Waterfall (2824 – 4540 Case Sizes)

| Capacitance | Cap Code | Case Size/ Series | C2824C | | | | | C3040C | | | | | C3640C | | | | | C4540C | | | | |
|---|---|---|---|---|---|---|---|---|---|---|---|---|---|---|---|---|---|---|---|---|---|---|
| | | Voltage Code | C | B | D | F | G | C | B | D | F | G | C | B | D | F | G | C | B | D | F | G |
| | | Rated Voltage (VDC) | 500 | 630 | 1000 | 1500 | 2000 | 500 | 630 | 1000 | 1500 | 2000 | 500 | 630 | 1000 | 1500 | 2000 | 500 | 630 | 1000 | 1500 | 2000 |
| | | Capacitance Tolerance | Product Availability and Chip Thickness Codes See Table 2 for Chip Thickness Dimensions | | | | | | | | | | | | | | | | | | | |
| 2,200 pF | 222 | J K M | TA | TA | TA | TA | TA | | | | | | | | | | | | | | | |
| 2,700 pF | 272 | J K M | TA | TA | TA | TA | TA | | | | | | | | | | | | | | | |
| 3,300 pF | 332 | J K M | TA | TA | TA | TA | TA | QB | QB | QB | QB | QB | | | | | | | | | | |
| 3,900 pF | 392 | J K M | TA | TA | TA | TA | TB | QB | QB | QB | QB | QB | MA | MA | MA | MA | MA | | | | | |
| 4,700 pF | 472 | J K M | TA | TA | TA | TB | TB | QB | QB | QB | QB | QB | MA | MA | MA | MA | MA | SA | SA | SA | SA | SA |
| 5,600 pF | 562 | J K M | TA | TA | TA | TB | TC | QB | QB | QB | QB | QB | MA | MA | MA | MA | MA | SA | SA | SA | SA | SA |
| 6,800 pF | 682 | J K M | TA | TA | TA | TB | | QB | QB | QB | QB | QC | MA | MA | MA | MA | MA | SA | SA | SA | SA | SA |
| 8,200 pF | 822 | J K M | TA | TA | TA | TC | | QB | QB | QB | QC | QC | MA | MA | MA | MA | MB | SA | SA | SA | SA | SA |
| 10,000 pF | 103 | J K M | TA | TA | TA | | | QB | QB | QB | QC | QD | MA | MA | MA | MA | MB | SA | SA | SA | SA | SB |
| 12,000 pF | 123 | J K M | TA | TA | TA | | | QB | QB | QB | QD | | MA | MA | MA | MB | MB | SA | SA | SA | SA | SB |
| 15,000 pF | 153 | J K M | TA | TA | TB | | | QB | QB | QB | QD | | MA | MA | MA | MB | MC | SA | SA | SA | SB | SB |
| 18,000 pF | 183 | J K M | TA | TA | TB | | | QB | QB | QB | | | MA | MA | MA | MC | | SA | SA | SA | SB | SC |
| 22,000 pF | 223 | J K M | TA | TB | TC | | | QB | QB | QC | | | MA | MA | MA | | | SA | SA | SA | SB | |
| 27,000 pF | 273 | J K M | TA | TB | | | | QB | QB | QC | | | MA | MA | MA | | | SA | SA | SA | SC | |
| 33,000 pF | 333 | J K M | TB | TB | | | | QB | QC | QC | | | MA | MA | MB | | | SA | SA | SA | | |
| 39,000 pF | 393 | J K M | TB | TC | | | | QB | QC | QD | | | MA | MA | MB | | | SA | SA | SB | | |
| 47,000 pF | 473 | J K M | TB | | | | | QB | QC | | | | MA | MB | MC | | | SA | SA | SB | | |
| 56,000 pF | 563 | J K M | TC | | | | | QC | QD | | | | MA | MB | | | | SA | SA | SB | | |
| 68,000 pF | 683 | J K M | | | | | | QC | QD | | | | MB | MC | | | | SA | SB | SC | | |
| 82,000 pF | 823 | J K M | | | | | | QC | | | | | MB | | | | | SA | SB | | | |
| 0.1 µF | 104 | J K M | | | | | | QD | | | | | MC | | | | | SB | SC | | | |
| 0.12 µF | 124 | J K M | | | | | | | | | | | MC | | | | | SB | | | | |
| 0.15 µF | 154 | J K M | | | | | | | | | | | | | | | | SC | | | | |
| Capacitance | Cap Code | Rated Voltage (VDC) | 500 | 630 | 1000 | 1500 | 2000 | 500 | 630 | 1000 | 1500 | 2000 | 500 | 630 | 1000 | 1500 | 2000 | 500 | 630 | 1000 | 1500 | 2000 |
| | | Voltage Code | C | B | D | F | G | C | B | D | F | G | C | B | D | F | G | C | B | D | F | G |
| | | Case Size/Series | C2824C | | | | | C3040C | | | | | C3640C | | | | | C4540C | | | | |

**Capacitance range Includes E24 decade values only (i.e., 10, 11, 12, 13, 15, 16, 18, 20, 22, 24, 27, 30, 33, 36, 39, 43, 47, 51, 56, 62, 68, 75, 82, and 91.)*
*KEMET reserves the right to substitute product with an improved temperature characteristic, tighter capacitance tolerance and/or higher voltage capability within the same form factor (configuration and dimensions.)*
*These products are protected under US Patents 7,172,985 and 7,670,981, other patents pending, and any foreign counterparts.*

## Table 2 – Chip Thickness/Tape & Reel Packaging Quantities

| Thickness Code | Case Size | Thickness ± Range (mm) | Paper Quantity | | Plastic Quantity | |
|---|---|---|---|---|---|---|
| | | | 7" Reel | 13" Reel | 7" Reel | 13" Reel |
| BB | 0402 | 0.50 ± 0.05 | 10000 | 50000 | 0 | 0 |
| BD | 0402 | 0.55 ± 0.05 | 10000 | 50000 | 0 | 0 |
| CG | 0603 | 0.80 ± 0.10* | 4,000 | 15,000 | 0 | 0 |
| DN | 0805 | 0.78 ± 0.10* | 4,000 | 15,000 | 0 | 0 |
| DP | 0805 | 0.90 ± 0.10* | 4,000 | 15,000 | 0 | 0 |
| DG | 0805 | 1.25 ± 0.15 | 0 | 0 | 2,500 | 10,000 |
| EB | 1206 | 0.78 ± 0.10 | 0 | 0 | 4,000 | 10,000 |
| EC | 1206 | 0.90 ± 0.10 | 0 | 0 | 4,000 | 10,000 |
| ED | 1206 | 1.00 ± 0.10 | 0 | 0 | 2,500 | 10,000 |
| EE | 1206 | 1.10 ± 0.10 | 0 | 0 | 2,500 | 10,000 |
| EF | 1206 | 1.20 ± 0.15 | 0 | 0 | 2,500 | 10,000 |
| EG | 1206 | 1.60 ± 0.15 | 0 | 0 | 2,000 | 8,000 |
| EH | 1206 | 1.60 ± 0.20 | 0 | 0 | 2,000 | 8,000 |
| FE | 1210 | 1.00 ± 0.10 | 0 | 0 | 2,500 | 10,000 |
| FF | 1210 | 1.10 ± 0.10 | 0 | 0 | 2,500 | 10,000 |
| FG | 1210 | 1.25 ± 0.15 | 0 | 0 | 2,500 | 10,000 |
| FL | 1210 | 1.40 ± 0.15 | 0 | 0 | 2,000 | 8,000 |
| FM | 1210 | 1.70 ± 0.20 | 0 | 0 | 2,000 | 8,000 |
| FY | 1210 | 2.00 ± 0.20 | 0 | 0 | 2,000 | 8,000 |
| FK | 1210 | 2.10 ± 0.20 | 0 | 0 | 2,000 | 8,000 |
| FS | 1210 | 2.50 ± 0.30 | 0 | 0 | 1,000 | 4,000 |
| LA | 1808 | 1.40 ± 0.15 | 0 | 0 | 1,000 | 4,000 |
| LB | 1808 | 1.60 ± 0.15 | 0 | 0 | 1,000 | 4,000 |
| LC | 1808 | 2.00 ± 0.15 | 0 | 0 | 1,000 | 4,000 |
| **Thickness Code** | **Case Size** | **Thickness ± Range (mm)** | **7" Reel** | **13" Reel** | **7" Reel** | **13" Reel** |
| | | | **Paper Quantity** | | **Plastic Quantity** | |

*Package quantity based on finished chip thickness specifications.*

## Table 2 – Chip Thickness/Tape & Reel Packaging Quantities cont.

| Thickness Code | Case Size | Thickness ± Range (mm) | Paper Quantity | | Plastic Quantity | |
|---|---|---|---|---|---|---|
| | | | 7" Reel | 13" Reel | 7" Reel | 13" Reel |
| GB | 1812 | 1.00 ± 0.10 | 0 | 0 | 1,000 | 4,000 |
| GD | 1812 | 1.25 ± 0.15 | 0 | 0 | 1,000 | 4,000 |
| GH | 1812 | 1.40 ± 0.15 | 0 | 0 | 1,000 | 4,000 |
| GK | 1812 | 1.60 ± 0.20 | 0 | 0 | 1,000 | 4,000 |
| GM | 1812 | 2.00 ± 0.20 | 0 | 0 | 500 | 2,000 |
| GO | 1812 | 2.50 ± 0.20 | 0 | 0 | 500 | 2,000 |
| HE | 1825 | 1.40 ± 0.15 | 0 | 0 | 1,000 | 4,000 |
| HG | 1825 | 1.60 ± 0.20 | 0 | 0 | 1,000 | 4,000 |
| HJ | 1825 | 2.00 ± 0.20 | 0 | 0 | 500 | 2,000 |
| HK | 1825 | 2.50 ± 0.20 | 0 | 0 | 500 | 2,000 |
| JE | 2220 | 1.40 ± 0.15 | 0 | 0 | 1,000 | 4,000 |
| JK | 2220 | 1.60 ± 0.20 | 0 | 0 | 1,000 | 4,000 |
| JL | 2220 | 2.00 ± 0.20 | 0 | 0 | 500 | 2,000 |
| JN | 2220 | 2.50 ± 0.20 | 0 | 0 | 500 | 2,000 |
| KE | 2225 | 1.40 ± 0.15 | 0 | 0 | 1,000 | 4,000 |
| KF | 2225 | 1.60 ± 0.20 | 0 | 0 | 1,000 | 4,000 |
| KH | 2225 | 2.00 ± 0.20 | 0 | 0 | 500 | 2,000 |
| KJ | 2225 | 2.50 ± 0.20 | 0 | 0 | 500 | 2,000 |
| TA | 2824 | 1.40 ± 0.15 | 0 | 0 | 750 | 1,500 |
| TB | 2824 | 2.00 ± 0.20 | 0 | 0 | 300 | 1,500 |
| TC | 2824 | 2.50 ± 0.20 | 0 | 0 | 300 | 1,500 |
| QB | 3040 | 1.40 ± 0.15 | 0 | 0 | 500 | 1,000 |
| QC | 3040 | 2.00 ± 0.20 | 0 | 0 | 500 | 1,000 |
| QD | 3040 | 2.50 ± 0.20 | 0 | 0 | 350 | 1,000 |
| MA | 3640 | 1.40 ± 0.15 | 0 | 0 | 250 | 1,000 |
| MB | 3640 | 2.00 ± 0.20 | 0 | 0 | 250 | 1,000 |
| MC | 3640 | 2.50 ± 0.20 | 0 | 0 | 250 | 1,000 |
| SA | 4540 | 1.40 ± 0.15 | 0 | 0 | 200 | 1,000 |
| SB | 4540 | 2.00 ± 0.20 | 0 | 0 | 200 | 1,000 |
| SC | 4540 | 2.50 ± 0.20 | 0 | 0 | 200 | 1,000 |
| **Thickness Code** | **Case Size** | **Thickness ± Range (mm)** | **7" Reel** | **13" Reel** | **7" Reel** | **13" Reel** |
| | | | **Paper Quantity** | | **Plastic Quantity** | |

*Package quantity based on finished chip thickness specifications.*

## Table 3 – Chip Capacitor Land Pattern Design Recommendations per IPC–7351

| EIA Size Code | Metric Size Code | Density Level A: Maximum (Most) Land Protrusion (mm) | | | | | Density Level B: Median (Nominal) Land Protrusion (mm) | | | | | Density Level C: Minimum (Least) Land Protrusion (mm) | | | | |
|---|---|---|---|---|---|---|---|---|---|---|---|---|---|---|---|---|
| | | C | Y | X | V1 | V2 | C | Y | X | V1 | V2 | C | Y | X | V1 | V2 |
| 0402 | 1005 | 0.50 | 0.72 | 0.72 | 2.20 | 1.20 | 0.45 | 0.62 | 0.62 | 1.90 | 1.00 | 0.40 | 0.52 | 0.52 | 1.60 | 0.80 |
| 0603 | 1608 | 0.90 | 1.15 | 1.10 | 4.00 | 2.10 | 0.80 | 0.95 | 1.00 | 3.10 | 1.50 | 0.60 | 0.75 | 0.90 | 2.40 | 1.20 |
| 0805 | 2012 | 1.00 | 1.35 | 1.55 | 4.40 | 2.60 | 0.90 | 1.15 | 1.45 | 3.50 | 2.00 | 0.75 | 0.95 | 1.35 | 2.80 | 1.70 |
| 1206 | 3216 | 1.60 | 1.35 | 1.90 | 5.60 | 2.90 | 1.50 | 1.15 | 1.80 | 4.70 | 2.30 | 1.40 | 0.95 | 1.70 | 4.00 | 2.00 |
| 1210 | 3225 | 1.60 | 1.35 | 2.80 | 5.65 | 3.80 | 1.50 | 1.15 | 2.70 | 4.70 | 3.20 | 1.40 | 0.95 | 2.60 | 4.00 | 2.90 |
| 1808 | 4520 | 2.30 | 1.75 | 2.30 | 7.40 | 3.30 | 2.20 | 1.55 | 2.20 | 6.50 | 2.70 | 2.10 | 1.35 | 2.10 | 5.80 | 2.40 |
| 1812 | 4532 | 2.15 | 1.60 | 3.60 | 6.90 | 4.60 | 2.05 | 1.40 | 3.50 | 6.00 | 4.00 | 1.95 | 1.20 | 3.40 | 5.30 | 3.70 |
| 1825 | 4564 | 2.15 | 1.60 | 6.90 | 6.90 | 7.90 | 2.05 | 1.40 | 6.80 | 6.00 | 7.30 | 1.95 | 1.20 | 6.70 | 5.30 | 7.00 |
| 2220 | 5650 | 2.75 | 1.70 | 5.50 | 8.20 | 6.50 | 2.65 | 1.50 | 5.40 | 7.30 | 5.90 | 2.55 | 1.30 | 5.30 | 6.60 | 5.60 |
| 2225 | 5664 | 2.70 | 1.70 | 6.90 | 8.10 | 7.90 | 2.60 | 1.50 | 6.80 | 7.20 | 7.30 | 2.50 | 1.30 | 6.70 | 6.50 | 7.00 |
| 2824 | 7260 | 3.45 | 1.70 | 6.60 | 9.60 | 7.60 | 3.35 | 1.50 | 6.50 | 8.70 | 7.00 | 3.25 | 1.30 | 6.40 | 8.00 | 6.70 |
| 3040 | 7610 | 3.70 | 1.70 | 10.70 | 10.10 | 11.70 | 3.60 | 1.50 | 10.60 | 9.20 | 11.10 | 3.50 | 1.30 | 10.50 | 8.50 | 10.80 |
| 3640 | 9210 | 4.45 | 1.70 | 10.70 | 11.60 | 11.70 | 4.35 | 1.50 | 10.60 | 10.70 | 11.10 | 4.25 | 1.30 | 10.50 | 10.00 | 10.80 |
| 4540 | - | 5.60 | 1.70 | 10.70 | 13.90 | 11.70 | 5.50 | 1.50 | 10.60 | 13.00 | 11.10 | 5.40 | 1.30 | 10.50 | 12.30 | 10.80 |

***Density Level A:*** *For low-density product applications. Recommended for wave solder applications and provides a wider process window for reflow solder processes. KEMET only recommends wave soldering of EIA 0603, 0805 and 1206 case sizes.*
***Density Level B:*** *For products with a moderate level of component density. Provides a robust solder attachment condition for reflow solder processes.*
***Density Level C:*** *For high component density product applications. Before adapting the minimum land pattern variations the user should perform qualification testing based on the conditions outlined in IPC Standard 7351 (IPC–7351).*
*Image below based on Density Level B for an EIA 1210 case size.*

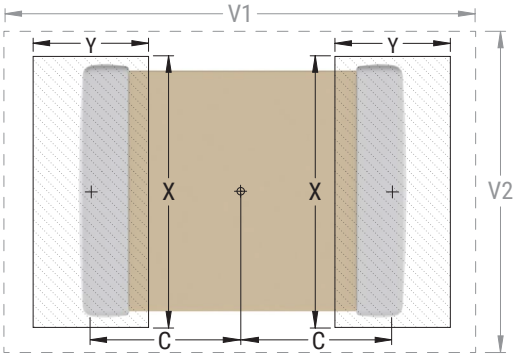

## Soldering Process

**Recommended Soldering Technique:**

- Solder wave or solder reflow for EIA case sizes 0603, 0805 and 1206
- All other EIA case sizes are limited to solder reflow only

**Recommended Reflow Soldering Profile:**

KEMET's families of surface mount multilayer ceramic capacitors (SMD MLCCs) are compatible with wave (single or dual), convection, IR or vapor phase reflow techniques. Preheating of these components is recommended to avoid extreme thermal stress. KEMET's recommended profile conditions for convection and IR reflow reflect the profile conditions of the IPC/J-STD-020 standard for moisture sensitivity testing. These devices can safely withstand a maximum of three reflow passes at these conditions.

| Profile Feature | Termination Finish | |
|---|---|---|
| | SnPb | 100% Matte Sn |
| **Preheat/Soak** | | |
| Temperature Minimum ($T_{Smin}$) | 100°C | 150°C |
| Temperature Maximum ($T_{Smax}$) | 150°C | 200°C |
| Time ($t_S$) from $T_{Smin}$ to $T_{Smax}$ | 60 – 120 seconds | 60 – 120 seconds |
| Ramp-Up Rate ($T_L$ to $T_P$) | 3°C/second maximum | 3°C/second maximum |
| Liquidous Temperature ($T^L$) | 183°C | 217°C |
| Time Above Liquidous ($t^L$) | 60 – 150 seconds | 60 – 150 seconds |
| Peak Temperature ($T_P$) | 235°C | 260°C |
| Time Within 5°C of Maximum Peak Temperature ($t_P$) | 20 seconds maximum | 30 seconds maximum |
| Ramp-Down Rate ($T_P$ to $T_L$) | 6°C/second maximum | 6°C/second maximum |
| Time 25°C to Peak Temperature | 6 minutes maximum | 8 minutes maximum |

*Note 1: All temperatures refer to the center of the package, measured on the capacitor body surface that is facing up during assembly reflow.*

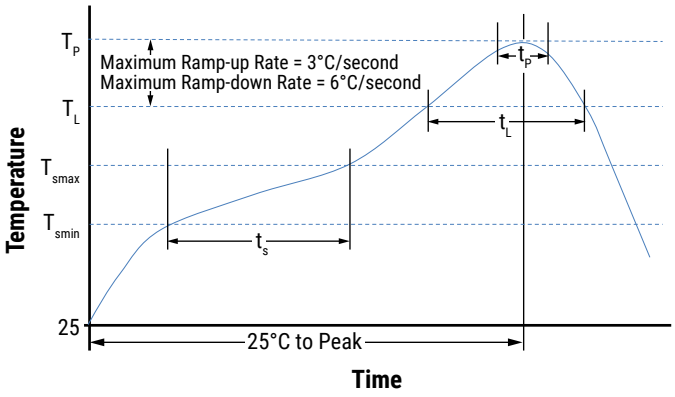


## Storage and Handling

Ceramic chip capacitors should be stored in normal working environments. While the chips themselves are quite robust in other environments, solderability will be degraded by exposure to high temperatures, high humidity, corrosive atmospheres, and long term storage. In addition, packaging materials will be degraded by high temperature–reels may soften or warp and tape peel force may increase. KEMET recommends that maximum storage temperature not exceed 40ºC and maximum storage humidity not exceed 70% relative humidity. Temperature fluctuations should be minimized to avoid condensation on the parts and atmospheres should be free of chlorine and sulfur bearing compounds. For optimized solderability chip stock should be used promptly, preferably within 1.5 years of receipt.

## Construction

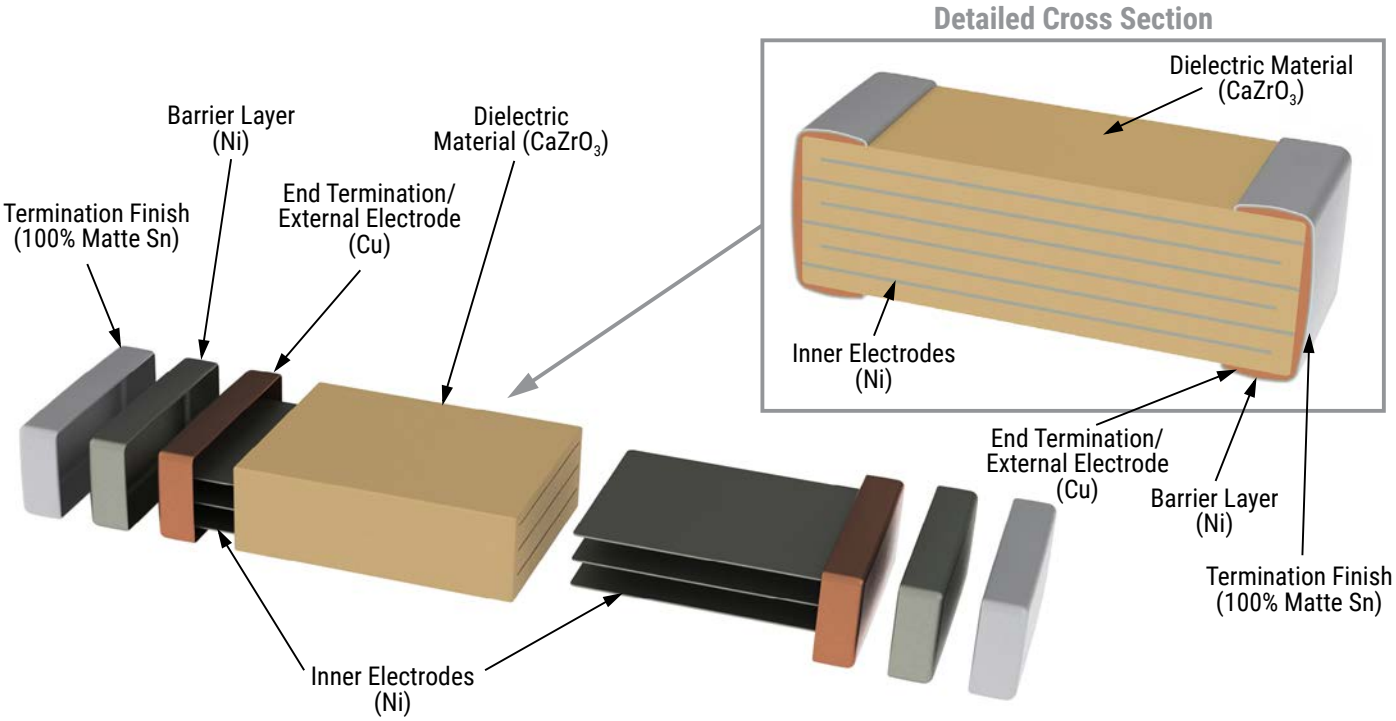


## Capacitor Marking (Optional):

Laser marking option is not available on:

- C0G, Ultra Stable X8R and Y5V dielectric devices
- EIA 0402 case size devices
- EIA 0603 case size devices with Flexible Termination option.
- KPS Commercial and Automotive grade stacked devices.

These capacitors are supplied unmarked only.

## Tape & Reel Packaging Information

KEMET offers multilayer ceramic chip capacitors packaged in 8, 12, 16 and 24 mm tape on 7" and 13" reels in accordance with EIA Standard 481. This packaging system is compatible with all tape-fed automatic pick and place systems. See Table 2 for details on reeling quantities for commercial chips.

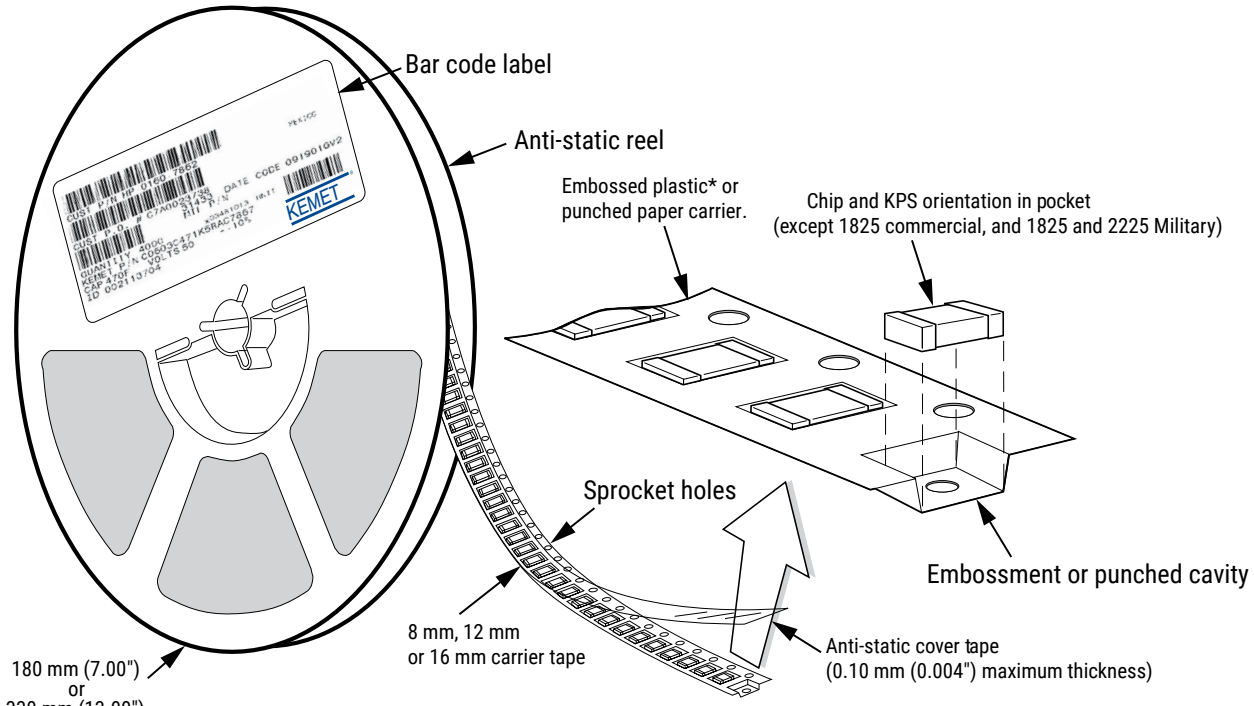


*EIA 01005, 0201, 0402 and 0603 case sizes available on punched paper carrier only.

## Table 5 – Carrier Tape Configuration, Embossed Plastic & Punched Paper (mm)

| EIA Case Size | Tape Size (W)* | Embossed Plastic | | Punched Paper | |
|---|---|---|---|---|---|
| | | 7" Reel | 13" Reel | 7" Reel | 13" Reel |
| | | Pitch ($P_1$)* | | Pitch ($P_1$)* | |
| 01005 – 0402 | 8 | | | 2 | 2 |
| 0603 | 8 | | | 2/4 | 2/4 |
| 0805 | 8 | 4 | 4 | 4 | 4 |
| 1206 – 1210 | 8 | 4 | 4 | 4 | 4 |
| 1805 – 1808 | 12 | 4 | 4 | | |
| ≥ 1812 | 12 | 8 | 8 | | |
| 2824 | 16 | 12 | 12 | | |
| 3040 – 4540 | 24 | 16 | 16 | | |
| KPS 1210 | 12 | 8 | 8 | | |
| KPS 1812 & 2220 | 16 | 12 | 12 | | |
| Array 0508 & 0612 | 8 | 4 | 4 | | |

**Refer to Figures 1 and 2 for W and $P_1$ carrier tape reference locations.*
**Refer to Tables 6 and 7 for tolerance specifications.*

**New 2 mm Pitch Reel Options***

| Packaging Ordering Code (C-Spec) | Packaging Type/Options |
|---|---|
| C-3190 | Automotive grade 7" reel unmarked |
| C-3191 | Automotive grade 13" reel unmarked |
| C-7081 | Commercial grade 7" reel unmarked |
| C-7082 | Commercial grade 13" reel unmarked |

** 2 mm pitch reel only available for 0603 EIA case size.*
*2 mm pitch reel for 0805 EIA case size under development.*

**Benefits of Changing from 4 mm to 2 mm Pitching Spacing**

- Lower placement costs
- Double the parts on each reel results in fewer reel changes and increased efficiency
- Fewer reels result in lower packaging, shipping and storage costs, reducing waste

## Figure 1 – Embossed (Plastic) Carrier Tape Dimensions

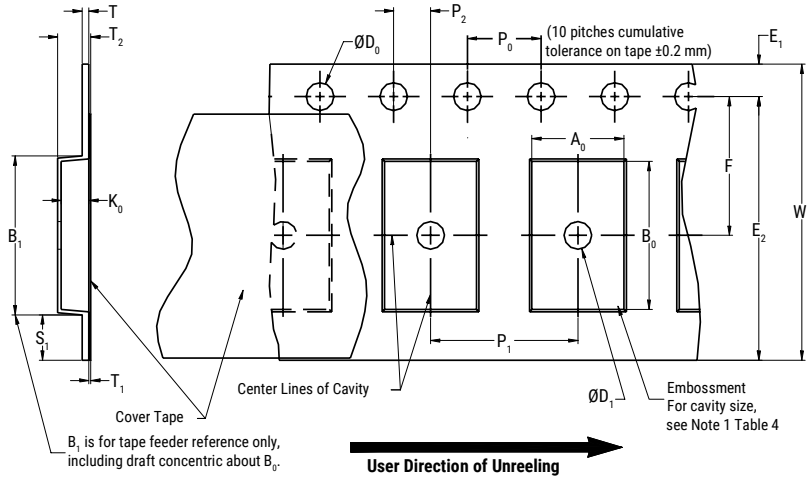


## Table 6 – Embossed (Plastic) Carrier Tape Dimensions

Metric will govern

| Constant Dimensions — Millimeters (Inches) | | | | | | | | |
|---|---|---|---|---|---|---|---|---|
| Tape Size | $D_0$ | $E_1$ | $P_0$ | $P_2$ | R Reference Note 2 | $S_1$ Minimum Note 3 | T Maximum | T1 Maximum |
| 8 mm | 1.5+0.10/−0.0 (0.059+0.004/−0.0) | 1.75±0.10 (0.069±0.004) | 4.0±0.10 (0.157±0.004) | 2.0±0.05 (0.079±0.002) | 25.0 (0.984) | 0.600 (0.024) | 0.600 (0.024) | 0.100 (0.004) |
| 12 mm | | | | | 30 (1.181) | | | |
| 16 mm | | | | | | | | |
| 24 mm | 1.5+0.10/−0.0 (0.059+0.004/−0.0) | 1.75±0.10 (0.069±0.004) | 4.0±0.10 (0.157±0.004) | 2.0±0.10 (0.078±0.003) | 30 (1.181) | 5 (0.196) | 0.250 (0.009) | 0.350 (0.013) |

| Variable Dimensions — Millimeters (Inches) | | | | | | | |
|---|---|---|---|---|---|---|---|
| Tape Size | Pitch | $E_2$ Minimum | F | $P_1$ | $T_2$ Maximum | W Maximum | $A_0$,$B_0$ & $K_0$ |
| 8 mm | Single (4 mm) | 6.25 (0.246) | 3.5±0.05 (0.138±0.002) | 4.0±0.10 (0.157±0.004) | 2.5 (0.098) | 8.3 (0.327) | Note 5 |
| 12 mm | Single (4 mm) & Double (8 mm) | 10.25 (0.404) | 5.5±0.05 (0.217±0.002) | 8.0±0.10 (0.315±0.004) | 4.6 (0.181) | 12.3 (0.484) | |
| 16 mm | Triple (12 mm) | 14.25 (0.561) | 7.5±0.05 (0.138±0.002) | 12.0±0.10 (0.157±0.004) | 4.6 (0.181) | 16.3 (0.642) | |
| 24 mm | 16 mm | 22.25 (0.875) | 11.5±0.10 (0.452±0.003) | 16.0±0.10 (0.629±0.004) | 3 (0.118) | 24.3 (0.956) | |

*1. The embossment hole location shall be measured from the sprocket hole controlling the location of the embossment. Dimensions of embossment location and hole location shall be applied independent of each other.*
*2. The tape with or without components shall pass around R without damage (see Figure 6).*
*3. If $S_1$ < 1.0 mm, there may not be enough area for cover tape to be properly applied (see EIA Standard 481 paragraph 4.3 section b).*
*4. $B_1$ dimension is a reference dimension for tape feeder clearance only.*
*5. The cavity defined by $A_0$, $B_0$ and $K_0$ shall surround the component with sufficient clearance that:*
*(a) the component does not protrude above the top surface of the carrier tape.*
*(b) the component can be removed from the cavity in a vertical direction without mechanical restriction, after the top cover tape has been removed.*
*(c) rotation of the component is limited to 20° maximum for 8 and 12 mm tapes and 10° maximum for 16 mm tapes (see Figure 3).*
*(d) lateral movement of the component is restricted to 0.5 mm maximum for 8 and 12 mm wide tape and to 1.0 mm maximum for 16 mm tape (see Figure 4).*
*(e) for KPS Series product, $A_0$ and $B_0$ are measured on a plane 0.3 mm above the bottom of the pocket.*
*(f) see Addendum in EIA Standard 481 for standards relating to more precise taping requirements.*

## Figure 2 – Punched (Paper) Carrier Tape Dimensions

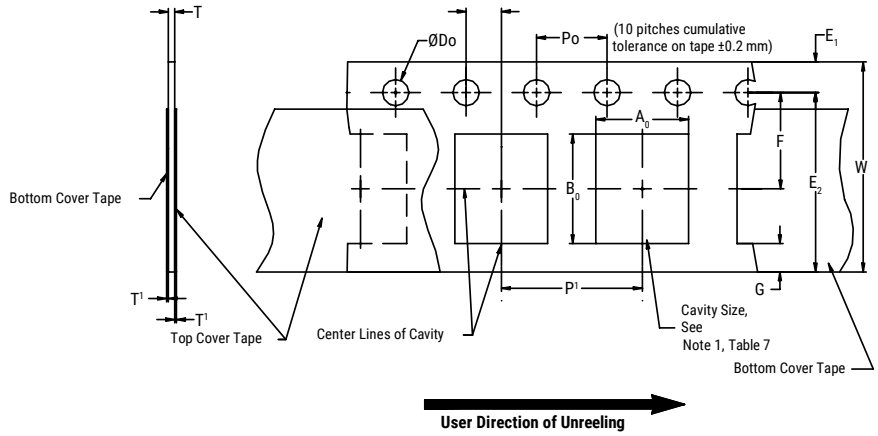


## Table 7 – Punched (Paper) Carrier Tape Dimensions

Metric will govern

| Constant Dimensions — Millimeters (Inches) | | | | | | | |
|---|---|---|---|---|---|---|---|
| Tape Size | $D_0$ | $E_1$ | $P_0$ | $P_2$ | $T_1$ Maximum | G Minimum | R Reference Note 2 |
| 8 mm | 1.5+0.10/−0.0 (0.059+0.004/−0.0) | 1.75±0.10 (0.069±0.004) | 4.0±0.10 (0.157±0.004) | 2.0±0.05 (0.079±0.002) | 0.10 (0.004) Maximum | 0.75 (0.030) | 2 (0.984) |

| Variable Dimensions — Millimeters (Inches) | | | | | | | |
|---|---|---|---|---|---|---|---|
| Tape Size | Pitch | E2 Minimum | F | $P_1$ | T Maximum | W Maximum | $A_0$ $B_0$ |
| 8 mm | Half (2 mm) | 6.25 (0.246) | 3.5±0.05 (0.138±0.002) | 2.0±0.05 (0.079±0.002) | 1.1 (0.098) | 8.3 (0.327) | Note 1 |
| 8 mm | Single (4 mm) | | | 4.0±0.10 (0.157±0.004) | | 8.3 (0.327) | |

*1. The cavity defined by $A_0$, $B_0$ and T shall surround the component with sufficient clearance that:*
*a) the component does not protrude beyond either surface of the carrier tape.*
*b) the component can be removed from the cavity in a vertical direction without mechanical restriction, after the top cover tape has been removed.*
*c) rotation of the component is limited to 20° maximum (see Figure 3).*
*d) lateral movement of the component is restricted to 0.5 mm maximum (see Figure 4).*
*e) see Addendum in EIA Standard 481 for standards relating to more precise taping requirements.*
*2. The tape with or without components shall pass around R without damage (see Figure 6).*

## Packaging Information Performance Notes

**1. Cover Tape Break Force:** 1.0 Kg minimum.
**2. Cover Tape Peel Strength:** The total peel strength of the cover tape from the carrier tape shall be:

| Tape Width | Peel Strength |
|---|---|
| 8 mm | 0.1 to 1.0 newton (10 to 100 gf) |
| 12 and 16 mm | 0.1 to 1.3 newton (10 to 130 gf) |
| 24 mm | 0.1 to 1.6 newton (10 to 160 gf) |

The direction of the pull shall be opposite the direction of the carrier tape travel. The pull angle of the carrier tape shall be 165° to 180° from the plane of the carrier tape. During peeling, the carrier and/or cover tape shall be pulled at a velocity of 300 ±10 mm/minute.
**3. Labeling:** Bar code labeling (standard or custom) shall be on the side of the reel opposite the sprocket holes. *Refer to EIA Standards 556 and 624*.

## Figure 3 – Maximum Component Rotation

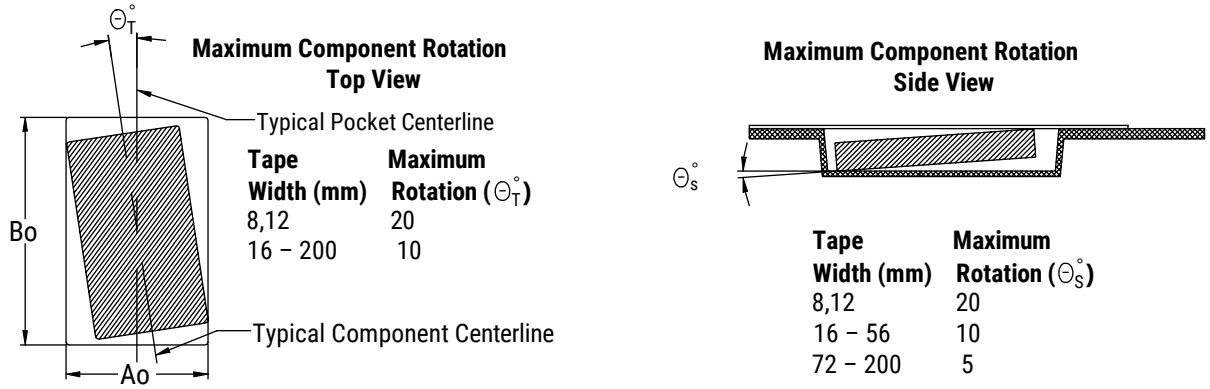


## Figure 4 – Maximum Lateral Movement

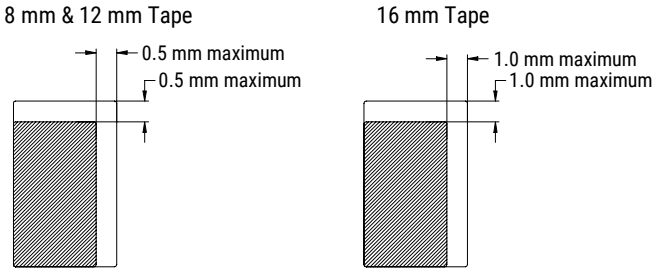


## Figure 5 – Bending Radius

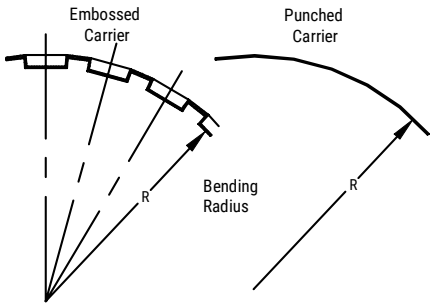

## Figure 6 – Reel Dimensions

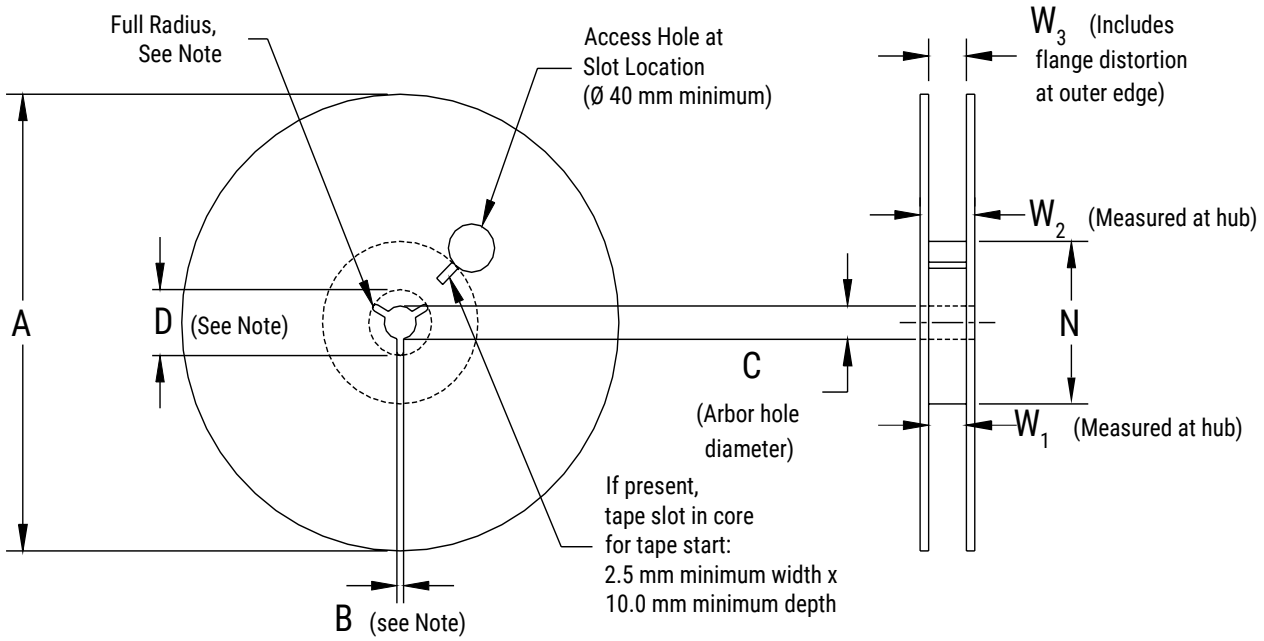


Note: Drive spokes optional; if used, dimensions B and D shall apply.

## Table 8 – Reel Dimensions

Metric will govern

| Constant Dimensions — Millimeters (Inches) | | | | |
|---|---|---|---|---|
| Tape Size | A | B Minimum | C | D Minimum |
| 8 mm | 178±0.20 (7.008±0.008) or 330±0.20 (13.000±0.008) | 1.5 (0.059) | 13.0+0.5/−0.2 (0.521+0.02/−0.008) | 20.2 (0.795) |
| 12 mm | | | | |
| 16 mm | | | | |
| 24 mm | | 1.2 (0.047) | 13.0 + −0.2 (0.521 + −0.008) | 21 (0.826) |

| Variable Dimensions — Millimeters (Inches) | | | | |
|---|---|---|---|---|
| Tape Size | N Minimum | $W_1$ | $W_2$ Maximum | $W_3$ |
| 8 mm | 50 (1.969) | 8.4+1.5/−0.0 (0.331+0.059/−0.0) | 14.4 (0.567) | Shall accommodate tape width without interference |
| 12 mm | | 12.4+2.0/−0.0 (0.488+0.078/−0.0) | 18.4 (0.724) | |
| 16 mm | | 16.4+2.0/−0.0 (0.646+0.078/−0.0) | 22.4 (0.882) | |
| 24 mm | | 25+1.0/−0.0 (0.984+0.039/−0.0) | 27.4+1.0/−1.0 (1.078+0.039/−0.039) | |

## Figure 7 – Tape Leader & Trailer Dimensions

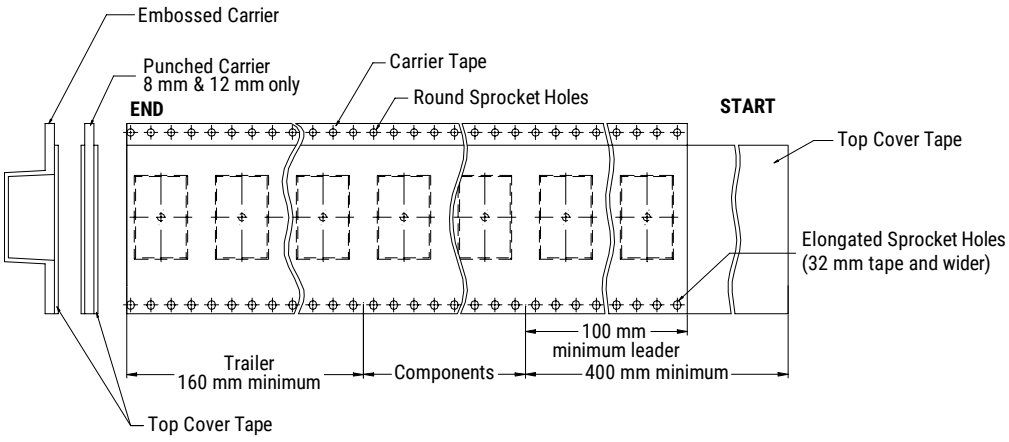


## Figure 8 – Maximum Camber

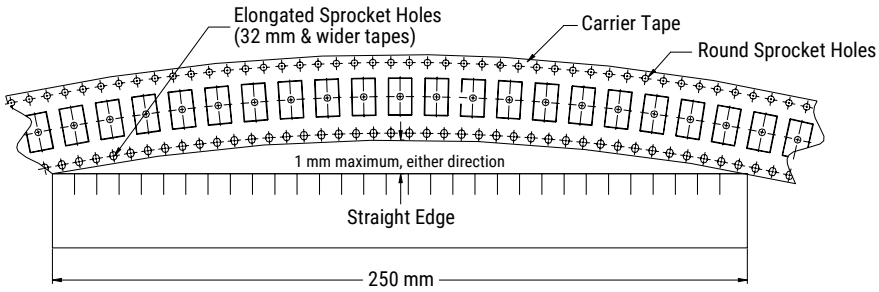

# Application Guide

### Solder Fluxes and Cleaning

The use of water-soluble fluxes provides advantages of excellent solderability due to high activation. However, these fluxes contain organic acids that can induce arcing under high DC or AC voltages. Notable problem areas are underneath the MLCC where flux can be trapped between the ceramic material and PCB. It is therefore critical that PCBs are properly cleaned to remove all flux residue to maintain reliability.

### Coating for High Voltage MLCCs

For MLCC ratings ≥1500V, it is recommended to apply a conformal coating to MLCC to prevent surface arcing. To reduce possibility of inducing cracks in the MLCC, select a coating with thermal expansions close to that of the MLCC.

| Dielectric | CTE (ppm/°C) |
|---|---|
| Class II $BaTiO_3$ | 10.7 |
| Class I $CaZrO_3$ | 9.8 |

### Slits in PCB

It is recommended to apply a slit in the PCB under the MLCC to improve washing of flux residue that may get trapped underneath. In some cases, it is not possible to slit entirely through the PCB due to underlying metal planes. It is also acceptable to apply a recessed slit under the MLCC which will also promote cleaning.

- Recommended for case sizes ≥1206
- The width (w) of the slit should be 1mm
- Length of the slit should be as short as possible to prevent damaging the MLCC due to mechanical stress of the PCB.
- Slits also reduce the risk of solder balls under MLCC which decreased the creepage distance.

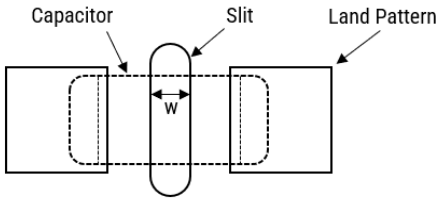


### Solder Resist

If a slit cannot be applied as above, it is recommended to not use solder resist directly under the MLCC. The use of solder resist material reduces the distance between MLCC ceramic material and PCB thus making it difficult to clean.

### Solder Balls

Improper reflow techniques and/or improper washing can induce solder balls under or adjacent to the MLCC. Solder balls reduce the creepage distance between the MLCC terminations and increase the risk of arcing or damage to the ceramic material. To reduce the risk of solder balls:

- Follow KEMET's solder recommendations as outlined in the datasheet.
- If performing a cleaning procedure, properly clean the PCB per KEMET's cleaning recommendations.
- Add slit to the PCB as shown above.

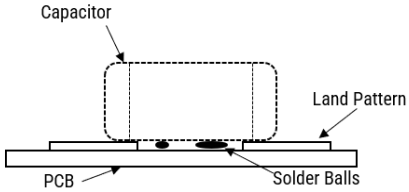

## KEMET Electronics Corporation Sales Offices

For a complete list of our global sales offices, please visit www.kemet.com/sales.

## Disclaimer

YAGEO Corporation and its affiliates do not recommend the use of commercial or automotive grade products for high reliability applications or manned space flight.

All product specifications, statements, information and data (collectively, the "Information") in this datasheet are subject to change. The customer is responsible for checking and verifying the extent to which the Information contained in this publication is applicable to an order at the time the order is placed. All Information given herein is believed to be accurate and reliable, but it is presented without guarantee, warranty, or responsibility of any kind, expressed or implied.

Statements of suitability for certain applications are based on KEMET Electronics Corporation's ("KEMET") knowledge of typical operating conditions for such applications, but are not intended to constitute – and KEMET specifically disclaims – any warranty concerning suitability for a specific customer application or use. The Information is intended for use only by customers who have the requisite experience and capability to determine the correct products for their application. Any technical advice inferred from this Information or otherwise provided by KEMET with reference to the use of KEMET's products is given gratis, and KEMET assumes no obligation or liability for the advice given or results obtained.

Although KEMET designs and manufactures its products to the most stringent quality and safety standards, given the current state of the art, isolated component failures may still occur. Accordingly, customer applications which require a high degree of reliability or safety should employ suitable designs or other safeguards (such as installation of protective circuitry or redundancies) in order to ensure that the failure of an electrical component does not result in a risk of personal injury or property damage.

Although all product–related warnings, cautions and notes must be observed, the customer should not assume that all safety measures are indicated or that other measures may not be required.

*KEMET is a registered trademark of KEMET Electronics Corporation.*