Carling Technologies®
NOW PART OF
Littelfuse®

641-Series

Pushbutton Switches

PRODUCT WEBPAGE

request sample, configure part

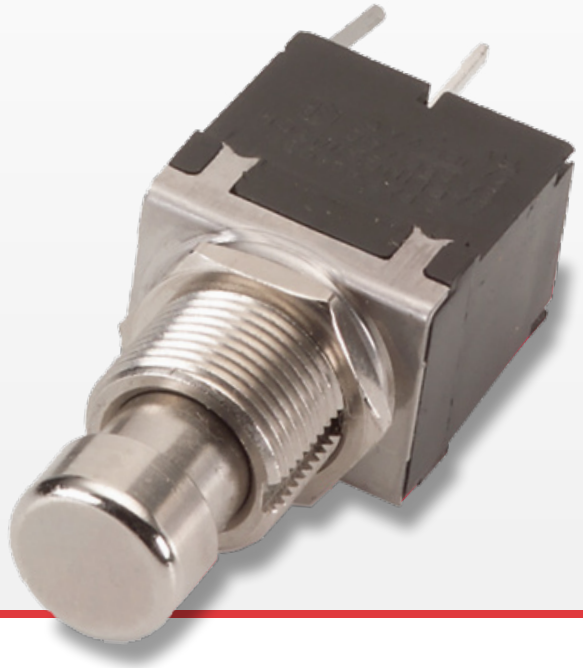

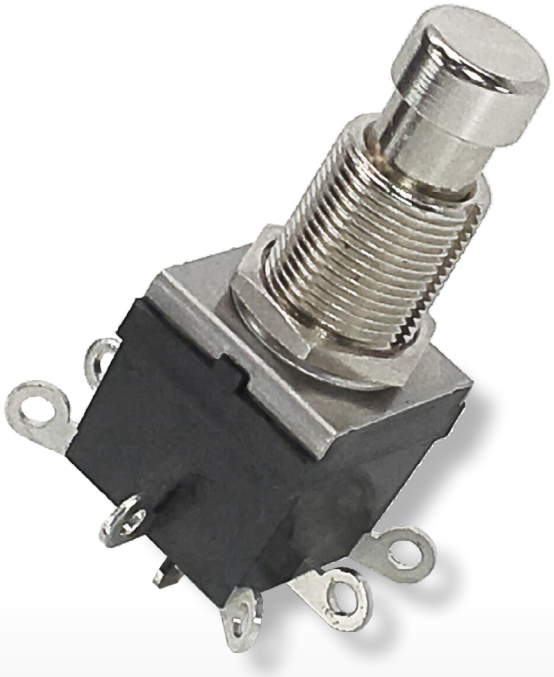

The 641-Series represents the most compact offerings of the Carling's pushbutton switch line. These switches are UL approved and meet ENEC spacing requirements. Additionally, the new 3-pole switch affords the versatility to control an extra function or indicator light.

1-3 Poles

2-5 Amps

125, 250 VAC

Typical Applications

- Music Equipment
- Test & Measurement
- Audio-Visual Equipment
- Appliances
- Industrial Automation

Tech Specs

Electrical

Rating	5A 125VAC, 2A 250VAC
Dielectric Strength	1500V RMS
Insulation Resistance	50 Megohms
Initial Contact Resistance	10 Milli Ohm max @ 4Vdc
Electrical Life	50,000 Cycles
Terminals	Solder Lug, Wire Leads and PC

Environmental

Vibration Sinusoidal	Mil STD 202G, Method 204D, Test Condition A 0.06DA or 10G's 10-500Hz
Shock	MIL-STD 2020G, Method 213B Test Condition K, 30G's
Handling Shock	1 Meter Drop onto Hard Surface, all surfaces and planes
Thermal Shock	MIL-STD 2020G, Method 107G Test Condition A -55 C to 85 C
Moisture Resistance	MIL-STD 2020G, Method 106F 10 25 C to 65 C Cycles 95% RH
Thermal Cycling	25 Cycles -40 C to 85 C
Operating Temperature	32°F to 185°F (0°C to +85°C)

Physical

Function Circuits	Three Pole Single Throw, TPST Three Pole Double Throw, TPDT
Operation	Alternate Action, Push ON, Push OFF
Button Travel	0.19 (4.83mm)
Actuation Force	3 to 5 LB, 1360 to 2268 g
Base	Polyester, PBT Glass Filled
Button	Brass, Nickel Plated
Bushing	Brass, Nickel Plated
Plunger	Brass, Nickel Plated
Top Plate	Stainless Steel
Actuator (Internal)	Nylon 6/6
Pin (Internal)[1]	Nylon 6/6
Driver	Cold Rolled Steel
Springs	Music Wire
Movable Contact	Copper
Terminals	Brass (tin plated)
Mounting	½" Dia. Hole, with and without keyway, or with locking ring

Safety & Regulation

Agency	UL 61058, EN 61058 (3 Pole Version) UL 1054 (1 & 2 Pole Version)
Materials	RoHS, REACH

*Manufacturer reserves the right to change product specification without prior notice.

Ordering Scheme

Sample Part Number 64111210

Selection 1

1. SERIES

One Pole 2A 250VAC, 5A 125VAC				Two Pole			Three Pole		
solder lug	PC term.	wire leads.		solder lug	PC term.	wire leads	solder lug	PC term.	wire leads
64111210	**64111212**	**64111215**	ON-OFF	**64112210**	**64112212**	**64112215**	**64113210**	**64113212**	**64113215**
64111220	**64111222**	**64111225**	ON-ON	**64112220**	**64112222**	**64112225**	**64113220**	**64113222**	**64113225**

Notes:
1 For 1 and 2 pole only. 3 Pole switches use brass Pin

Configure Complete Part Number > | Browse Standard Parts >

Dimensional Specs

inches [millimeters]

1 OR 2 POLE SHOWN WITH SOLDER LUG

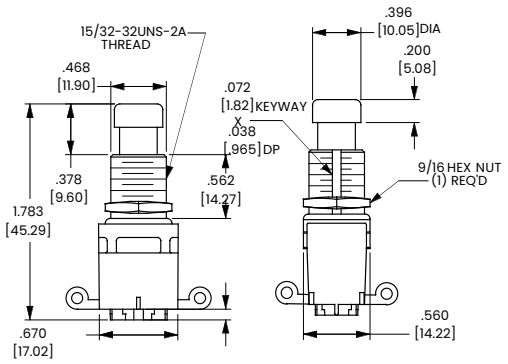

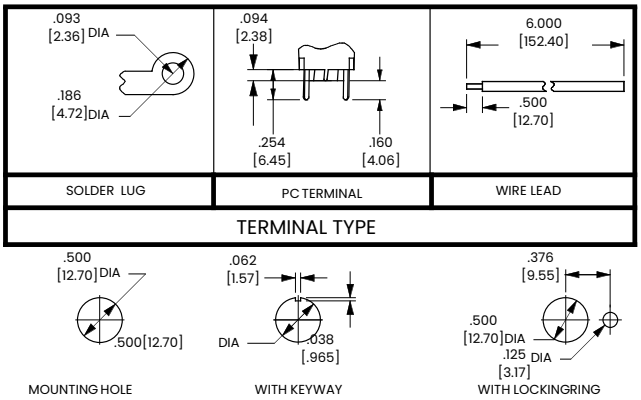

3 POLE SHOWN WITH SOLDER LUG

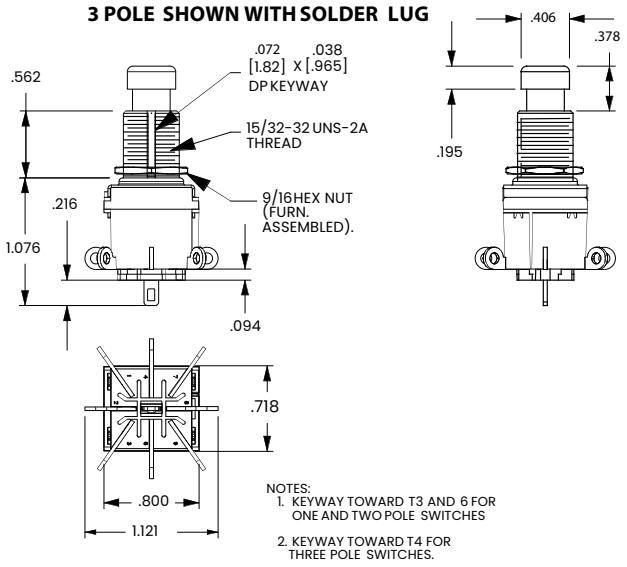

NOTES:
1. KEYWAY TOWARD T3 AND 6 FOR ONE AND TWO POLE SWITCHES
2. KEYWAY TOWARD T4 FOR THREE POLE SWITCHES.

3 POLE SHOWN WITH PC TERMINAL

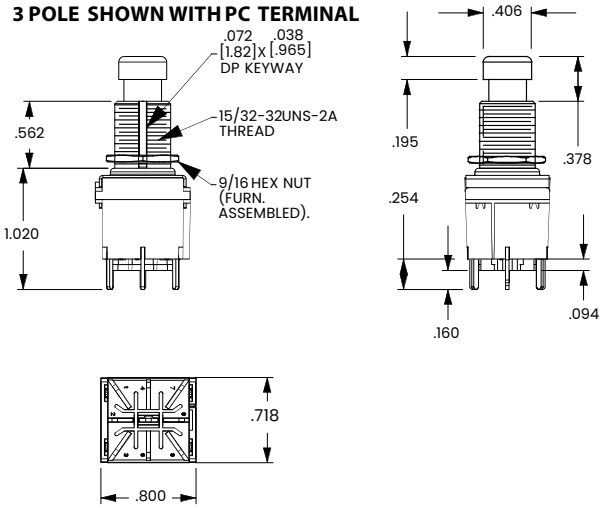

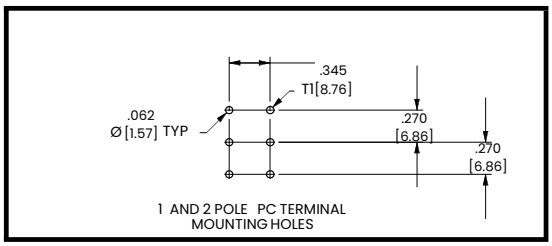

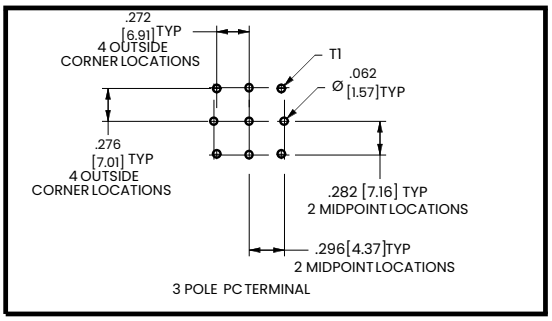

Authorized Sales Representatives and Distributors

Click on a region of the map below to find your local representatives and distributors or visit **www.carlingtech.com/findarep**.

About Carling

Founded in 1920, Carling Technologies is a leading manufacturer of electrical and electronic switches and assemblies, circuit breakers, electronic controls, power distribution units, and multiplexed power distribution systems. With six ISO9001 and IATF16949 registered manufacturing facilities and technical sales offices worldwide, Carling Technologies Sales, Service and Engineering teams do much more than manufacture electrical components, they engineer powerful solutions! To learn more about Carling please visit **www.carlingtech.com/company-profile**.

To view all of Carling's environmental, quality, health & safety certifications please visit **www.carlingtech.com/environmental-certifications**.

© Carling Technologies, Inc.
Carling is a registered trademark of Carling Technologies, Inc. in the U.S. and other countries.